Chickaloon Biomass Pre-feasibility Study

Submitted to Chickaloon Environmental Office and AWEDTG

Greg Koontz, ME; Bill Wall, PhD

Chickaloon Tribal Administration Office

July 25, 2013

Table of Contents

EXECUTIVE SUMMARY **3**
1.1 Acknowledgements **3**
1.3 Sources **3**
1.4 Scope **4**
1.5 Resource and Economic Assumptions **4**
Cost Escalation for Fuels 6
Pellet Purchase, Delivery, and Storage 8
Pellet Stoves, Pellet Boilers, and Solar Heat 8
1.6 Summary of Economic Findings **8**
Benefit Cost Ratio 12
1.7 Next steps **13**
TECHNICAL SUMMARY **14**
2.1 Existing Conditions **14**
2.2 Wood Fuels / Wood Fired Heating Equipment: **14**
Boiler Maintenance 16
2.3 Proposed Configuration **18**
2.4 Energy Savings **20**
2.5 Cost Estimate **22**
Appendix 1. Site Photos **23**
Figure 1. Front view of the maintenance building and environmental office. 23
Figure 2. Rear view where pellet boiler shed will be added. 23
Figure 3. Tribal admin building 100' behind shop building 24
Figure 4. Current oil boiler 24
Appendix B. Brochure for the Froling Pellet Boiler **25**

EXECUTIVE SUMMARY

1.1 Acknowledgements

This feasibility study was supported by the Alaska Wood Energy Task Group and administered by the Fairbanks Economic Development Corporation.

1.2 Objective

The objective of this report, as the title suggests, is to document the results of a pre-feasibility study performed for the Village of Chickaloon. Buildings in the Village are currently heated with oil or propane. The subject of the study is the feasibility of converting two buildings included in the study to utilize an automated wood-fired heat boiler as the primary source.

Feasibility studies are often classified as Level 1 (L1), Level 2 (L2), or Level 3 (L3). Level 1 studies consist of very rough calculations on a small number of important metrics (unit fuel costs, etc). Some refer to L1 studies as "back-of-the-envelope" calculations.

At the other end, L3 studies are commonly called "investment grade studies"; the level of detail and calculation is so high that one could use the results of an L3 study to get an outside entity to fund the implementation of the project.

Level 2, then, is the bridge between L1 and L3; it is a screening study done to determine if it is worth the time and expense to initiate an L3 study. Level 3 studies are generally quite expensive and thus not entered into lightly. The L2 study helps decision makers determine which aspects, if any, of a proposed project are worth the expense of an L3 study.

An L1 study can be done remotely; an L2 study requires at least a minimum amount of site observation of existing conditions, conversations with the affected parties, and research with second-order parties (local foresters, vendors, local contractors, etc). This is a Level 2 study.

Sustainability, Inc (SI) and efour, PLLC (efour) perform L2 and L3 studies across the state of Alaska, from cities to small rural villages. We use the same performance and economic models for each type of study; for us, the primary difference between the two studies is the quality of the inputs, which is generally a function of how much time has been spent gathering information and the depth of that information.

1.3 Sources

The primary sources of information that inform this study are data collected on site by SI and data provided by the Fairbanks Economic Development Corporation (FEDC). Data collected on site by SI

include existing site conditions, equipment name plate data, current energy cost data, and equally important, information gathered by talking to the local stakeholders in the Village.

In addition, the Village has been actively pursuing a renewable solutions for the Village buildings, including not only biomass heating, but solar thermal heating, solar photovoltaic power, and so on. They have published some of their results in a Renewable Energy Plan. In terms of biomass heating, SI and efour performed all their own analysis without reference to the Renewable Plan. However, we did extract information from the Plan regarding the use of solar thermal panels to supplement the biomass boilers, and incorporated that information into our results. We have not attempted to validate the solar thermal performance and cost estimate data used in the Plan; we incorporated the information as published.

In addition to the site knowledge gathered by SI, additional biomass boiler performance and cost data have been accumulated over the past several years from working with local engineers and contractors, and from performing multiple L2 and L3 wood-fired feasibility studies.

Hourly weather data for the performance model was taken data collected and reported by Palmer Municipal Airport, which is located about 30 miles away from Chickaloon, in the same river valley.

1.4 Scope

In Chickaloon, the scope of this report is limited to two buildings; A building that includes both a Shop and the Environmental Offices (the Shop), and the Village Administration Offices (Admin Offices). Currently, each building has its own heating system. The Shop utilizes an oil-fired boiler, while a propane-fired heater heats the Admin Offices.

Biomass heating systems can be expensive to install; the economics generally work better for larger buildings, or where two or more smaller buildings can be grouped together and served by a single biomass boiler, using buried piping between the buildings to distribute the heat.

Taken alone, neither of the two buildings in this study is large enough to justify a biomass boiler – the first costs are so high that the project economics are unfavorable under the public grant economic approach. Chickaloon recognized this, and proposed grouping these two buildings into a common biomass heating plant – the buildings are roughly 120 feet apart, so piping costs between the buildings are minimal. SI and efour have followed this concept; we present the result only for a common heating plant that serves both buildings.

As noted above, Chickaloon has proposed supplementing the biomass heat to these two buildings with solar thermal heating panels mounted on the wall of the Shop. We have therefore presented the economic and energy results in two forms – first without utilizing solar thermal, and then a second time including the solar thermal cost and performance data as presented in the Plan.

1.5 Resource and Economic Assumptions

SI and efour often perform studies on villages in Bush Alaska; off the toad system. In these villages, biomass boilers generally have only two possible forms of fuel, wood chips or stick wood, both of which they must produce themselves from local forests. Villages on the road system, however, have a third

option; wood pellets produced elsewhere and trucked to the village. For small-scale projects, pellets are in almost every way the best option.

The main reason is that the village need not invest in wood harvesting and processing equipment – they simply buy the pellets. The cost per ton may be higher than chips, but the pellets are much drier, and therefore have a significantly higher content per pound (BTU/lb) than wood chips. Pellets handle very well, almost never fouling the material handling systems. They are not at risk of freezing as long as they are kept dry; chips contain so much surface and internal moisture that freezing into clumps is an issue.

Equally important is that because of various issues, reliable chip-fired boiler can only be made so small; we have not found any with an output capacity of less than 500,000 BTU/h (500 kBTU/h). Pellet boilers can have capacities as low as 35 kBTU/h. The estimated combined peak-heating load of the Shop and Admin Offices is 92.6 kBTU/h – so even the smallest chip-fired boiler is significantly too large. It can be made to work, but the Village would be paying for a lot of boiler they were not using – this shows up in the economic results.

Stick-fired boilers were not included in the discussion above. Stick wood is almost always the cheapest in terms of $/BTU, and is always available in the Village (or can be collected locally). However, there are no stick-fired boilers that have automated feed systems – they must be fed manually every few hours (as often as every four hours in cold weather). If this labor is accounted for in the model, then this generally reduces the economics of stick-wood boilers as an option.

Our model presents the results for all three fuel forms, but in Chickaloon, we would only recommend pellet-fired boilers as this is the specific scenario that they requested after significant research and a previous energy study for pellets.

Figure 1.1 below shows the assumptions that have been made for the existing fuels in the Village (oil and propane):

Village Energy Cost / Properties

description	value	units
oil heat content	134.00	kBTU/gal
propane heat content	91.80	kBTU/gal
low village oil cost	$4.48	per gal
high village oil cost	$4.48	per gal
propane cost	$4.250	per gal
electrical energy to village	$0.130	per kWh

Figure 1.1

Figure 1.2 shows the assumptions made for the cost of wood fuel, in various forms.

Wood Costs

description	value	units
wood chips, to DH	$125.00	green ton
stick wood, split, to DH	$250.00	cord
pellets, to DH	$325.00	ton
bricks, to DH		ton

Figure 1.2

Because each form of fuel has different heat content and is sold in differing units, direct comparisons of the data in Figures 1.1 and 1.2 are very difficult. To make the comparison simple, all these energy sources are converted to a common unit, one million BTU (1 mmBTU).

To make the comparison even more relevant, the conversion efficiency of each source has been factored in. In this case, the conversion efficiency is the boiler efficiency. It is different for each fuel – using drier wood results in better boiler efficiency, and the oil and propane boilers have their own efficiencies as well. In Figure 1.3 below, therefore, the mmBTUs references are those coming out of the boiler into the space, not the gross heat content of the fuel going into the boiler.

Unit Energy Costs, comparison
(to village, boiler eff accounted for)

description	value	units
low oil	$39.80	per mmBTU
high oil	$39.80	per mmBTU
electrical energy	$38.10	per mmBTU
recovered heat		per mmBTU
wood chips	$14.84	per mmBTU
stick wood	$20.40	per mmBTU
pellets	$23.85	per mmBTU
propane	$55.11	per mmBTU

Figure 1.3

As expected, stick wood is the least expensive, followed closely by wood chips and wood pellets. Oil is half again as much as wood, and propane is more than twice as expensive as any wood source.

Cost Escalation for Fuels

Escalation in bush Alaska does not necessarily operate as it does in the lower 48, or even as it does in other parts of Alaska. An entire year's worth of oil for off road system village, for instance, is often delivered by barge within a 3-month window when river conditions allow it. Thus the price might be constant for an entire year, regardless of what happens to oil prices between the last barge of one year and the first of the next year. If the barge company did not sell out of oil in the first, then that oil price might apply for two years (especially if the year one cost was high and the year two cost dropped).

So oil costs in the bush escalate in a step-wise fashion, nevertheless, they do escalate over time, and we attempt to choose a rate that provides a smooth, but reasonable prediction of future prices. At the same

time, we try to avoid using escalation rates that are so extreme that the escalation rate alone makes the project viable.

Over a 20 year time frame, even a "dog-of-a-project" can be made to look good if (for example) wood is escalated at 3 percent a year, and oil is escalated at 8 percent a year. And yet, within the last few years, oil was for a period escalating at 8 plus percent a year. For studies done during that period, one could justify using an 8 percent escalation, but one would likely be disappointed if the project financial depended on that rate remaining constant for 20 years.

In the Level 2 feasibility, we prefer to see if the project stands on its own, without relying on escalation. In general, we use very low values, knowing they are likely conservative. For Alaskan villages, our current escalation rates are 4.5 percent for oil, and 1 percent for wood. The reasoning for this is simple.

A long-term escalation rate of 4.5 percent seems to be supported in Alaska, so we use that value as a lower bound. Labor tends to escalate at a lower rate (closer to 3 percent) and in fact wages have been stagnant in the US for several years. In the villages, wage rates have little correlation to other markets, so we assumed a low escalation rate for labor.

In most cases in Alaska, the wood itself belongs to the village, so its value is whatever the village says it is – there is no underlying correlation to other market factors (there is no other market they can sell it into) – so we assume the escalation rate of the wood to be zero. However, that wood has to be processed and transported, although over smaller distances than most biomass, and that requires labor and oil (or gasoline). Therefore, while we make no assumption that the cost of the underlying wood will change with time, we use a one percent overall escalation rate for processed wood fuel based on the assumption that the oil/gas/labor costs associated with processing and transportation will escalate the fuel costs at 1.0 percent.

Again, a Level 2 study is a screening study, and we believe that at this level, the project really should prove its viability without relying on high rates of escalation. So we use the lowest reasonable rate that we believe exists for oil, and then ratio the other rates down from there, based on their dependency on outside market factors (in this case, petroleum). Electrical energy, for instance, is escalated at 3.0 percent in the model because it is much more dependent on oil prices than wood fuel (but not directly correlated).

The intent in the Level 2 study is to get the escalation rate ratios "in-the-ballpark", and get the overall values as low as possible to minimize their impact on the financials. In the Level 3 study, the escalation rates will be set by the entity financing the project, based on their due diligence, and the future rate risk they wish to take on. As noted above, any project that relies on consistently high or widely divergent escalation rates would be considered very risky from a financial standpoint, and unlikely to get implemented. We would actually prefer to use zero percent for all rates at the L2 level, just to ensure the underlying project is valid regardless of future rates; instead, we use the lowest rates we feel we can use and worry more about the ratio of the rates that the values themselves.

In terms of risk, the reasoning is:

1) If the cost of processing wood goes up significantly, the likely cause is that the cost of oil went up significantly.
2) The cost of oil makes up 100 percent of the cost of fuel for an oil-fired boiler.
3) The cost of oil makes up only a fraction (although a significant fraction) of the cost of processed wood fuel, THUS
4) Oil will always escalate faster than wood fuel – we simply chose to minimize this effect in the Level 2 study for the reasons stated above.

Pellet Purchase, Delivery, and Storage

Chickaloon's environmental department did quite a bit of research on their approach to wood energy and developed an energy plan that was reviewed and used in this report. In discussions with Chickaloon personnel they told us that they had a plan for bulk delivery of pellets starting at $325 per ton and included delivery costs from North Pole. The plan called for a silo storage bin that will feed into the installed boiler. We used the fact that Froling boilers come with an adjacent pellet bin, which would equate to a "day-tank" – that is, it stores several hours or a day's worth of fuel, and is located very close to the boiler (attached, in this case). For larger bulk storage, we assumed the building also includes a Froling bag silo system, which would hold pellets for more than a week's operation. Additional bulk storage could be included in the village, or a larger bin could be constructed with a screw-type feed system installed in lieu of the bag silo. This level of detail is generally decided in the investment grade study. Freezing is typically not an issue with wood pellets if you do not let them get wet. The moisture content is less than 5-10 percent, and this moisture is bound up mostly in the cells of the wood.

Pellet Stoves, Pellet Boilers, and Solar Heat

The study in Chickaloon was based on a previous report commissioned by the environmental department and their request for reviewing their design. The large environmental department shop and office is too large for multiple pellet stoves and will require a pellet boiler. The Tribal Admin building could be heated with two pellet stoves if the client wished to do so. However, with 100 feet of pipe coming off a building that will require a boiler, it makes sense to automate both buildings into one heating and pellet feeding system. Solar heat under these circumstances does not add value to the system.

1.6 Summary of Economic Findings

The following Figures summarize the performance and economic modeling that SI and efour performed. As noted above, we show the results for pellet, chip and stick fired boilers, but we would only recommend the use of pellet boilers in this case. The text of this section, therefore, deals only with the pellet fired option.

Figure 1.4 below shows the overall economic summary:

Exec Summary table

NO Solar Thermal	chip fired boiler	stick fired boiler	pellet fired boiler
estimated project implementation cost	$132,212	$115,143	$107,407
base fuel cost (existing)	$12,488	$12,488	$12,488
proposed fuel cost	$4,476	$5,576	$6,022
estimated annual fuel savings	$8,012	$6,913	$6,467
(1) estimated additional maintenance			
total estimated savings	$8,012	$6,913	$6,467
net simple payback	16.5 yrs	16.7 yrs	16.6 yrs
fraction of oil / propane displaced	1.000	1.000	1.000

(1) see text for explanation

WITH Solar Thermal	chip fired boiler	stick fired boiler	pellet fired boiler
estimated project implementation cost	$162,650	$145,581	$137,845
base fuel cost (existing)	$12,488	$12,488	$12,488
proposed fuel cost	$3,715	$4,628	$4,998
estimated annual fuel savings	$8,773	$7,860	$7,490
(1) estimated additional maintenance			
total estimated savings	$8,773	$7,860	$7,490
net simple payback	18.5 yrs	18.5 yrs	18.4 yrs
fraction of oil / propane displaced	1.000	1.000	1.000

(1) see text for explanation

Figure 1.4

As footnote (1) indicates, we have not estimated any increase in annual maintenance with the installation of the pellet-fired boiler. This is because the fuel consistency is so high, the material handling so smooth, and the pellet boilers so reliable that in essence it is as close to being as automatic as an oil fired boiler that a wood fired boiler can get. We would expect that whoever currently cares for the oil and propane boiler will also take care of the pellet boiler, and that no significant additional time or parts expenses will be incurred.

It was noted above that biomass boiler projects require a certain scale in order to be truly economical. Even when the two buildings in Chickaloon are combined, they are quite small as biomass projects go. This is reflected in the net simple payback of the project, roughly 17 years. Although the unit cost of oil and propane are much higher than that of wood, the buildings are so small that the base fuel cost of fuel, $12,488, is not large enough to offset the cost of the construction in a relatively short time frame, even if all of the liquid fuel is displaced by wood energy (as is the case).

Note that the addition of the solar thermal option does not improve the project economics; the marginal savings do not offset the marginal additional cost– thus the NSP get slightly longer with Solar included.

Figure 1.4 is based on current fuel costs; these will not stay the same. Thus we present a 20 year cash flow the project (pellets only). In this cash flow, the cost of all fuels is escalated, although not at the same rate. Wood is assumed to increase in cost at a slower rate than oil or propane, because the resource is local and renewable. The escalation rates used are shown in Figure 1.5:

Escalation Factors

liquid fuel	0.045	per year
electrical energy	0.030	per year
recovered heat	0.030	per year
wood chips	0.010	per year
stick wood	0.010	per year
wood pellets, bricks	0.010	per year

Figure 1.5

Using these factors results in the following 20 year cash flows:

Cash Flow | Pellets | No Solar Thermal

yr	existing	proposed	Savings
1	$12,488	$6,022	$6,467
2	$13,048	$6,082	$6,966
3	$13,632	$6,143	$7,490
4	$14,243	$6,204	$8,039
5	$14,881	$6,266	$8,615
6	$15,548	$6,329	$9,219
7	$16,244	$6,392	$9,852
8	$16,972	$6,456	$10,516
9	$17,732	$6,520	$11,212
10	$18,527	$6,586	$11,941
11	$19,357	$6,652	$12,705
12	$20,224	$6,718	$13,506
13	$21,130	$6,785	$14,345
14	$22,076	$6,853	$15,223
15	$23,065	$6,922	$16,144
16	$24,099	$6,991	$17,108
17	$25,178	$7,061	$18,118
18	$26,306	$7,131	$19,175
19	$27,485	$7,203	$20,282
20	$28,716	$7,275	$21,442

Figure 1.6

Cash Flow | Pellets | with Solar Thermal

yr	existing	proposed	Savings
1	$12,488	$4,998	$7,490
2	$13,048	$5,048	$8,000
3	$13,632	$5,098	$8,534
4	$14,243	$5,149	$9,094
5	$14,881	$5,201	$9,680
6	$15,548	$5,253	$10,295
7	$16,244	$5,305	$10,939
8	$16,972	$5,358	$11,613
9	$17,732	$5,412	$12,320
10	$18,527	$5,466	$13,061
11	$19,357	$5,521	$13,836
12	$20,224	$5,576	$14,648
13	$21,130	$5,632	$15,498
14	$22,076	$5,688	$16,388
15	$23,065	$5,745	$17,321
16	$24,099	$5,802	$18,296
17	$25,178	$5,860	$19,318
18	$26,306	$5,919	$20,387
19	$27,485	$5,978	$21,507
20	$28,716	$6,038	$22,678

Figure 1.7

In essence, the savings are projected to more than triple by year 20. For that reason, the high NSP of the projects should not be enough to disqualify them. Renewable projects provide benefits beyond the monetary ones. These decisions must be made at the Village level.

The final Figure of this subsection is a summary of the cost estimate. The complete construction estimate is contained within Appendix B.

Cost Estimate Summary

		chip fired boiler	stick fired boiler	pellet fired boiler
construction cost subtotal		$101,986	$88,220	$81,982
(see section 2.5 for est)				
design	0.100	$10,199	$8,822	$8,198
bid assistance	0.005	$510	$441	$410
cons admin	0.080	$8,159	$7,058	$6,559
Cx/start up	0.005	$510	$441	$410
contingency	0.050	$5,099	$4,411	$4,099
soft costs subtotal		$24,477	$21,173	$19,676
percent of construction cost		24.0%	24.0%	24.0%

estimated permits	$5,000	$5,000	$5,000
estimated review fees	$750	$750	$750
permits / fees subtotal	$5,750	$5,750	$5,750
estimated total costs (no solar thermal)	**$132,212**	**$115,143**	**$107,407**
(1) add solar thermal	$30,438	$30,438	$30,438
(no increase in permit/fees)			
adder for solar thermal	$30,438	$30,438	$30,438
estimated total costs (with solar thermal)	**$162,650**	**$145,581**	**$137,845**

Figure 1.8

Benefit Cost Ratio

The benefit to cost ratio is an attempt to capture the value of the project over the lifetime of the project. A lifetime of 20 years is commonly used. The output of the calculations included is actually two numbers, the actual benefit/cost ratio, and the net present value (NPV) of the project.

The project cost is a one-time event, but the savings accrue over the life of the project. Depending on the assumed inflation rate of the various fuel sources, the savings may actually increase each year (if, for instance, oil rises faster than biomass, as we have assumed). On the other hand, a dollar saved in year 20 is not worth a dollar today; it is worth the NPV of one dollar, at the assumed discount rate. The discount rate is the rate of return one assumes one could make if that dollar were invested in some other fashion – in a bank account, or on another project. The combination of one time and recurring costs, plus inflation and discounting means that it would be very useful if the lifetime benefits, divided by the lifetimes costs, could be boiled down to one number; the benefit to cost ratio.

The current year is always year zero for the calculation, and it is generally assumed that construction would be completed in year one (or, for a long process or project, year two). The NPV of the project cost for a project completed in year one is almost, but not quite the same as the project cost; it has only been discounted one year. This is the COST part of the ratio. The BENEFIT is the NPV of the stream of savings (fuel savings, in this case) that the project generates over the 20 year lifetime. Divide the Benefit (in dollars) by the Cost (in dollars), and you get the dimensionless Benefit to Cost ratio; generally, any value over 1.00 is considered good, but different agencies have different target values.

The NPV benefit is simply the NPV of the combined (savings minus cost) Cost and Savings cash flow over 20 years. In the year the project is constructed, the "savings stream" is negative, because the discounted project cost is much greater than the yearly savings – all other years, the savings are positive. Take the NPV of that cash stream, and that is the NPV benefit of the project. Unlike the ratio, this value only really tells one something useful when compared to another variant of the same project, or another project that would use the same initial cash input. The project with the higher NPV benefit (in dollars) is generally better.

The NPV net benefit is $46,977 and the benefit cost ratio is 1.450 as demonstrated in Figure 1.9.

Benefit to Cost Ratio — **Chickaloon | wood pellets**

									discount rate for oil / propane	**0.030**				
									discount rate for biomass	**0.010**				
			project fuel use and cost, current heating configuration										NPV calcs for B/C	
		project capital cost	oil gal	unit cost $/gal	cost	propane gal	unit cost $/gal	cost	total fuel cost	predicted biomass useage tons/yr	unit cost $/ton	cost	savings	net benefit
	2013		1,818	$4.48	$8,145	1,022	$4.25	$4,344	$12,488	18.50	$325	$6,013		
1	2014	$107,407	1,818	$4.61	$8,389	1,022	$4.38	$4,474	$12,863	18.50	$328	$6,073	$6,790	($100,617)
2	2015		1,818	$4.75	$8,641	1,022	$4.51	$4,608	$13,249	18.50	$332	$6,134	$7,115	$7,115
3	2016		1,818	$4.90	$8,900	1,022	$4.64	$4,746	$13,646	18.50	$335	$6,195	$7,451	$7,451
4	2017		1,818	$5.04	$9,167	1,022	$4.78	$4,889	$14,056	18.50	$338	$6,257	$7,799	$7,799
5	2018		1,818	$5.19	$9,442	1,022	$4.93	$5,035	$14,477	18.50	$342	$6,320	$8,158	$8,158
6	2019		1,818	$5.35	$9,725	1,022	$5.07	$5,186	$14,911	18.50	$345	$6,383	$8,529	$8,529
7	2020		1,818	$5.51	$10,017	1,022	$5.23	$5,342	$15,359	18.50	$348	$6,447	$8,912	$8,912
8	2021		1,818	$5.68	$10,317	1,022	$5.38	$5,502	$15,820	18.50	$352	$6,511	$9,309	$9,309
9	2022		1,818	$5.85	$10,627	1,022	$5.55	$5,667	$16,294	18.50	$355	$6,576	$9,718	$9,718
10	2023		1,818	$6.02	$10,946	1,022	$5.71	$5,837	$16,783	18.50	$359	$6,642	$10,141	$10,141
11	2024		1,818	$6.20	$11,274	1,022	$5.88	$6,012	$17,287	18.50	$363	$6,708	$10,578	$10,578
12	2025		1,818	$6.39	$11,612	1,022	$6.06	$6,193	$17,805	18.50	$366	$6,775	$11,030	$11,030
13	2026		1,818	$6.58	$11,961	1,022	$6.24	$6,379	$18,339	18.50	$370	$6,843	$11,496	$11,496
14	2027		1,818	$6.78	$12,319	1,022	$6.43	$6,570	$18,889	18.50	$374	$6,912	$11,978	$11,978
15	2028		1,818	$6.98	$12,689	1,022	$6.62	$6,767	$19,456	18.50	$377	$6,981	$12,475	$12,475
16	2029		1,818	$7.19	$13,070	1,022	$6.82	$6,970	$20,040	18.50	$381	$7,051	$12,989	$12,989
17	2030		1,818	$7.40	$13,462	1,022	$7.02	$7,179	$20,641	18.50	$385	$7,121	$13,520	$13,520
18	2031		1,818	$7.63	$13,866	1,022	$7.24	$7,395	$21,260	18.50	$389	$7,192	$14,068	$14,068
19	2032		1,818	$7.86	$14,282	1,022	$7.45	$7,616	$21,898	18.50	$393	$7,264	$14,634	$14,634
20	2033		1,818	$8.09	$14,710	1,022	$7.68	$7,845	$22,555	18.50	$397	$7,337	$15,218	$15,218
	sum	$107,407			$233,560			$124,556				$139,733	$211,907	$104,500
	NPV	**$104,279**			$166,056			$88,557				$101,475	**$151,256**	**$46,977**
									benefit to cost ratio	**1.450**				
									NPV net benefit	**$46,977**				

Figure 1.9

1.7 Next steps

Based on economics alone, the project is marginal but the benefit cost ratioo is 1.45 and thus financially doable. The real issue is the actual estimate of the Soft Costs in the project. Our standard is around 24% of the total project to meet standards of a granting organization. However, these costs are probably higher than necessary and should be considered by the granting agency in the ranking process for the projects economic viability. Also, as noted above, the project generates benefits to the Village beyond the obvious monetary ones. Among these are:

- Use of renewable resources
- Reliance on local, rather than remote energy sources
- Reduced carbon footprint
- Reduced secondary emissions (NOx, S, CO, etc)
- Increased fuel price stability (for future budget planning)
- Energy money spent remains in the local economy

There are no doubt others as well. As was noted above, a Level 2 study is a screening study, meant to provide enough information to the stakeholders to A) determine how to proceed next, B) determine whether to proceed, or C) halt the project until conditions improve. This study provides the information needed for Chickaloon and other stakeholders to make these decisions; the next steps are up to them.

TECHNICAL SUMMARY

2.1 Existing Conditions

The following statistics in Figure 2.1 summarize the existing conditions in the two buildings:

Existing Conditions		the Shop	Admin Office
heated area	sf	3,400	1,368
number of floors		2	1
frequency of usage		daily	daily
age of original bldg	yrs	> 20 yrs	22 years
renovations/additions		add in 2003	
primary heat		oil boiler	propane blr
mfg		Weil McLain	Toyo
condition		good	good
location		mech room	mech room
hot water		off boiler	off boiler
annual fuel consumption	gal	1,818	1,022

Figure 2.1

The proposed pellet-fired boiler would displace all of the liquid fuel consumption of the two buildings; however, the existing systems would remain in place as back up. This is explained in more detail in 2.3.

2.2 Wood Fuels / Wood Fired Heating Equipment:

The model that SI / efour uses for these feasibility studies calculates the properties of wood fuels based on: 1) species used (can be more than one), and 2) moisture content at time of burn. If more than one species is selected, the model calculates a "composite" value for the fuel. For example, if one used 70 percent of a specie/moisture with 6,000 BTU/lb and the remaining 30 percent had a specie/moisture heat content of 8,000 BTU/lb, the "composite fuel would have (0.7 * 6,00) + (0.3 * 8,000) = 6,600 BTU/lb. Figure 2.2 shows the calculated properties for the pellets used in this analysis. The properties of chips and stick wood are also calculated, but as noted above, the report is based on a pellet-fired boiler.

	Wood for Pellets	MC at cut	MC at burn	weight fraction
1	Cottonwood, logs			
2	Birch, logs			
3	Aspen, logs	0.50	0.04	0.300
4	B Spruce, logs			
5	W Spruce, logs	0.50	0.04	0.700
6				
7				
8				
9				
10				
			checksum	1.000

Composite Pellet Properties		
net useable heat	8,017	BTU/lb at burn MC
weight at cut MC	1.920	lb/lb at burn MC
density as stacked logs	22.396	lb/cf at burn MC
density as pellets	28.717	lb/cf at burn MC
combustion air req	6.973	lb/wet lb at burn MC
combustion air req	95.531	cf/wet lb at burn MC
CO2 formed	1.8222	lb/wet lb at burn MC
SOx formed	0.0001	lb/wet lb at burn MC
ash	0.0293	lb/wet lb at burn MC
ash volume	0.0046	cf/wet lb at burn MC

Figure 2.2

The most pertinent value in the Figure is the net useable heat content, 8,017 BTU/lb. Because of the low moisture content (5-10 percent), pellets are by far the densest form of wood fuel.

There are a number of manufacturers of pellet boilers; the basis of design boilers used in this study is the P4 series of boiler made by Froling. There are eight sizes in the P4 series, ranging from 35.8 kBTU/h output to 200 kBTU/h.

The basic system components include:

- A pellet bin, which holds bulk amounts of wood pellets.
  - This bin is kept filled by periodic deliveries to the Village by truck
  - Some trucks have an adjustable auger which can move the pellets from truck to bin
  - Pellets can also be blown pneumatically, although that is more common in areas with extensive pellet use
  - Pellets can be "dumped" into a front loader, and then dumped in the bin
  - There are a number of delivery and loading methods
- A means getting the pellets from the bin into the boiler (material handling)
  - This can be an auger
  - Froling offers an option that pneumatically conveys the pellets to the boiler (the pellets are entrained in a moving stream of air)
- The boiler
  - The boiler uses onboard controls to modulate the firing rate to meet heating demand
  - Will remain on and operating as long as the bin is kept filled, and no fuel fouling occurs
  - Is a "hands-off" unit
- A thermal storage tank
  - This tank is basically a "wide spot in the pipe"
  - It hold large amounts of water, thus large amounts of heat
  - In essence, the boiler heats the tank, the tank heats the building
  - Wood-fired boilers cannot change output as quickly as liquid fueled boilers; when heating load is variable, the tank smoothes out the load and gives the boiler controls time to react

  - When loads are very low, the boiler may shut down (it will automatically re-start when needed); during these "OFF" periods, the tank provide a reserve of hot water
  - By monitoring tank temperature, the boiler can "anticipate" when load starts to increase or decrease, and thus provide more stable temperatures
- *Solar Thermal Panels / pump / heat exchanger (if included)*
  - *This system uses heat from the sun to supplement the wood-fired boiler*
  - *The cooler return water from the buildings is routed to the heat exchanger before it gets to the boiler*
  - *In this way, the system always takes all of the available the free solar heat before using the wood heat*
  - *The tank even allows storage of solar heat if the available heat exceeds the heating load*
- A vent or boiler stack
  - This vents the products of combustion and boiler emissions into the air through an elevated stack or vent pipe
  - May or may not include additional emissions control equipment

Examples of the Froling boilers and accessories are included in Appendix A

Boiler Maintenance

In general, when evaluating small biomass boilers that serve one or two buildings, we do not include additional costs for maintenance associated with that boiler. This is not to say that there is not more maintenance associated with a biomass boiler as compared to an oil-fired boiler. In terms of project finance and viability, the point is not whether there is more maintenance or not, it is whether the additional maintenance has any cost associated with it.

In general, the additional work associated with a wood-fired boiler consists primarily of removing ash from the boiler once a day, and ensuring the feed bins or hoppers are full. Some larger chip-fired boilers and almost all pellet boilers (including all the ones we propose) actually de-ash themselves, but all require someone to fill the feed system. For stick-fired boilers, feeding the boiler is entirely manual and firing may take place several times per day. For chips or pellets, one simply keeps a bin or hopper full, depending on the bin size and the heating load, this may be required once or twice a week, and is generally down with a Bobcat, front loader, or some equivalent.

Once a week one would spend perhaps an hour cleaning the heat exchange surfaces, and once a quarter or half-year, one would take 2 – 4 hours to thoroughly clean the boiler tubes with a brush.

Of course, failures can occur, with the boiler or with the feed system. However, failures occur with oil boilers as well, and the system as designed would automatically revert to the oil boilers in the event of a biomass boiler failure. The maintenance personnel would then fix the biomass system when time permits, as they do currently with equipment failures.

The costs associated with "non-failure" maintenance have up to three components; the cost of labor, the cost of maintenance materials, and the costs of outside maintenance or operating contracts. Taking each in turn:

- Labor: This is the cost of people's time. For this component, it is assumed that each village (or in some cases, some individual buildings within the village) has someone on the payroll whose job is to take of the existing oil-fired boilers. This may or may not be the entire scope of their job. If one assumes that de-ashing and disposal takes 30 minutes a day, and loading the bin (chips and pellets) takes an hour twice a week, and includes one hour per week for HX cleaning, then the day-to-day maintenance of the biomass boilers takes an additional 6.5 hours per week. This figure does not subtract out any time that would have been spent with the oil-fired boilers (which is no longer required, because they are not running).

  If a regular workweek for a full time employee (FTE) is 40 hours, this is 0.1625 of a week, or looked at another way, 16.25 percent of an FTE. The question is, "Will the village actually hire someone full or part time to perform those tasks, or we they simply add them to the scope of the work of the existing FTE?" If they do not hire someone new, then there is no additional cost, even though there is additional maintenance.

  In our experience, at this very preliminary stage of evaluation, the villages simply do not know how they would maintain one or more biomass boilers – they have no experience with them, and of the time required. This should be developed with a conceptual design report and a business plan. It also depends on how the fuel is generated and distributed. If an entity in the village takes on the making and distributing of wood chips, for instance, then the time (and thus the cost) associated with filling the fuel bins would almost certainly fall on that entity, and be built into the $/ton cost of the chips. The same would apply for villages on the road system that purchase pellets. In such a case, the additional maintenance would be reduced to the de-ashing (assuming the boiler does not do it automatically) and periodic cleaning; we believe it highly unlikely that additional personnel would be hired for these tasks. Thus we generally assume the value of this cost component to be zero at this preliminary stage.

- Maintenance Materials: Biomass boilers require no maintenance materials that other types of machinery (including oil-fired boilers) do not also require. Rotating machinery must be lubricated, motors must be checked for balance or excessive heat, and so on. Once again, at Level 2 stage of study, we assume the cost of this maintenance component to be zero as compared to an oil boiler.

- Outside Maintenance or Operating contracts: It may the case in some villages that an entity or person creates a business to maintain and/or operate boilers within the village. In such a case, this business would almost certainly charge an additional amount for operating and maintaining the new biomass boilers. However, we not aware that such an entity exists in this case, and so once again, we have set the cost of this component of maintenance to zero.

This leaves the extreme case of manual loading of stick-wood into stick-fired boiler. On a very cold day, this could require several hours per day, spread over four six-hour periods (we generally size stick-fired plants such that even in the coldest weather, they require no more than 4 "charges" per day). However, even here, we cannot be sure there is added cost – a tribal office might, for instance, simply require everyone on the staff to take turns loading the boiler. Alternately, they might hire one or more FTEs to do this.

The number of variables is very large, and at the Level 2 stage, we find that villages simply have not given much if any thought as to these matters. The L2 study is a screening study, used to decide whether or not to proceed to with a project and to a conceptual design study that should define the project more specifically at an investment grade level; if the results of the L2 study are favorable, then the actual maintenance costs (if any), as well as a number of other operating details, are thoroughly determined and documented.

2.3 Proposed Configuration

The proposed final configuration, which has been modeled for this study, can be summarized as:

- A new 8 x 20 mechanical room is constructed on the back side of the Shop
- The new pellet boiler, pellet bin, and material handling accessories are installed in the mechanical room
- The thermal storage tank is installed in the mechanical room
- The solar thermal panels, if used, are mounted on the south side of the shop; the remaining system components are installed in the new mechanical room
- The heat from the wood fired boiler is piped into the existing Shop mechanical room using copper pipe
- The heat from the wood fired boiler is also piped to the Admin Office mechanical room, using a combination of insulated plastic pipe (direct buried) and copper pipe (once inside the building
- The plastic pipe proposed is a system called Insulpex, by Rehau; details can be found in Appendix B
- The new piping will be tied into the existing systems in such a way that will always take the "wood heat" before taking oil/propane heat (see details below)
- However, if for any reason the wood fired system cannot meet load, the existing boilers will automatically start and fire as required to meet load

Figure 2.3 below shows a typical configuration for an oil-fired boiler or boiler plant. In this example, there are two boilers, but only one runs at a time. In Chickaloon, there is only one, but the integration of the systems is the same. This would be the "existing" case.

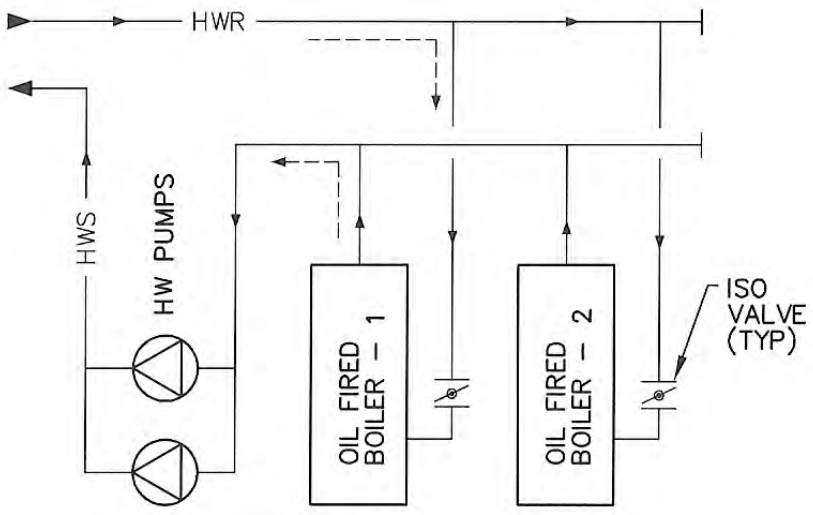

Figure 2.3

Figure 2.4 shows the proposed case (valves colored in solid are closed):

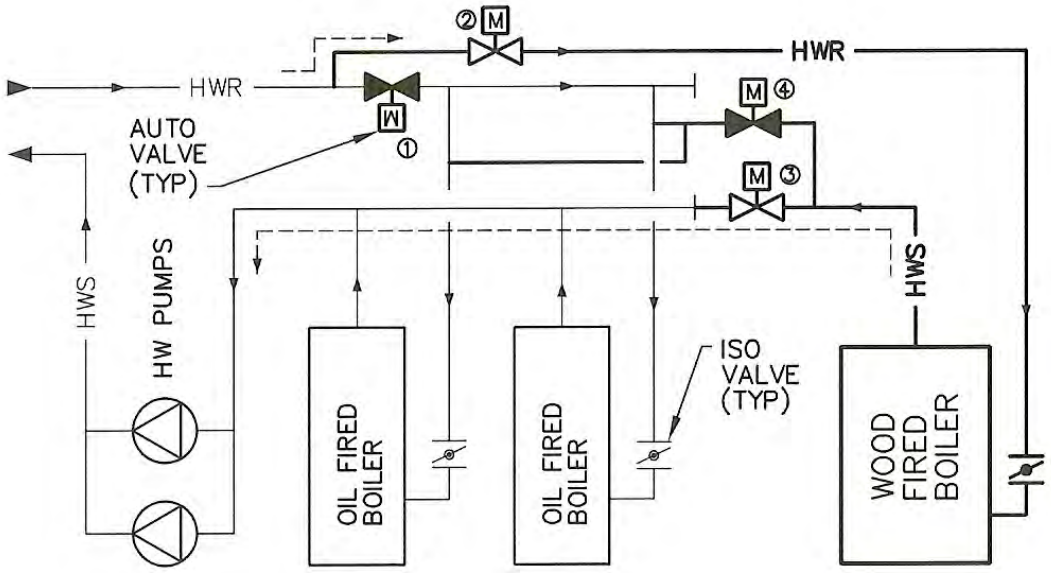

Figure 2.4

In this case, valve 1 is closed, which forces the hot water return water through the wood fired boiler instead of the oil-fired boiler. Likewise, valve 4 is closed, so the hot water from the wood-fired boiler bypasses the existing boilers and goes out to the building. If for any reason, the hot water supply temperature falls below set point by a set amount, the valves reverse position, and the existing boiler start.

In an even simpler version, there are no automatic valves – the cooler return water flow through the *(solar thermal heat exchanger, if installed)*, the wood-fired boiler, and then the oil / propane boilers. If the solar system meets set point, no boiler fires. If the solar system cannot heat the water to the supply set point, the wood-fired system fires as needed to provide the additional heat required. If for any reason the wood-fired system still does not meet supply water set point, the existing boiler fires.

The system works because each successive set point is set 5 or more degrees below the previous one. Say the three hot water supply set point was, in order, 185 deg F, 180 deg F, and 175 deg F. If we take a day when the solar heat is meeting load, the system would be delivering 185 deg F water. Perhaps a cloud goes by and the available solar energy dips. By having a 5 deg F spread in set points, this prevents the wood-fired boiler from starting every time a cloud goes by. Likewise, it was noted above that wood-fired boilers cannot modulate output as fast as a liquid-fired boiler. The set point spread prevents the existing boilers from firing every time the wood fired boiler needs a bit of time to catch up (as does the thermal storage tank). At the same time, the system requires no operator intervention or automated controls. If the hot water temperature falls to 174 deg F, the oil-fired boiler does not know if the sun went down, or the wood pellets fouled the material handling system – it simply fires because the supply temperature has fallen below its set point.

2.4 Energy Savings

Figure 2.5 below summarizes the energy consumption, existing and proposed, on a monthly basis:

Energy Summary (montly "heat out" and "cost" values are divided by 1,000 for formating reasons)

Shop / Environ Off		total	Jan	Feb	Mar	Apr	May	Jun	Jul	Aug	Sep	Oct	Nov	Dec
oil	gal	1,818	337	178	238	117	87	44	37	40	74	160	245	261
heat out	kBTU	197,326	36.5	19.3	25.8	12.7	9.5	4.8	4.1	4.4	8.0	17.3	26.6	28.3
cost	$	$8,145	$1.5	$0.8	$1.1	$0.5	$0.4	$0.2	$0.2	$0.2	$0.3	$0.7	$1.1	$1.2

*heat out = heat content of fuel * boiler eff (average efficiency is assumed at 0.810)*

Admin Office		total	Jan	Feb	Mar	Apr	May	Jun	Jul	Aug	Sep	Oct	Nov	Dec
propane	gal	1,022	191	100	134	66	49	24	20	22	41	90	138	148
heat out	kBTU	75,994	14.2	7.5	10.0	4.9	3.6	1.8	1.5	1.6	3.0	6.7	10.3	11.0
cost	$	$4,344	$0.8	$0.4	$0.6	$0.3	$0.2	$0.1	$0.1	$0.1	$0.2	$0.4	$0.6	$0.6

*heat out = heat content of fuel * boiler eff (average efficiency is assumed at 0.810)*

Biomass Boiler		total	Jan	Feb	Mar	Apr	May	Jun	Jul	Aug	Sep	Oct	Nov	Dec
heat out	kBTU	273,320	50.7	26.8	35.8	17.6	13.1	6.6	5.5	6.0	11.0	24.0	36.9	39.3
chips	tons	35.8	6.6	3.5	4.7	2.3	1.7	0.9	0.7	0.8	1.4	3.1	4.8	5.2
stick	cords	22.3	4.1	2.2	2.9	1.4	1.1	0.5	0.5	0.5	0.9	2.0	3.0	3.2
pellets	tons	18.5	3.4	1.8	2.4	1.2	0.9	0.4	0.4	0.4	0.7	1.6	2.5	2.7
chips	$	$4,476	$0.8	$0.4	$0.6	$0.3	$0.2	$0.1	$0.1	$0.1	$0.2	$0.4	$0.6	$0.6
stick	$	$5,576	$1.0	$0.5	$0.7	$0.4	$0.3	$0.1	$0.1	$0.1	$0.2	$0.5	$0.8	$0.8
pellets	$	$6,022	$1.1	$0.6	$0.8	$0.4	$0.3	$0.1	$0.1	$0.1	$0.2	$0.5	$0.8	$0.9

Energy Savings		total	Jan	Feb	Mar	Apr	May	Jun	Jul	Aug	Sep	Oct	Nov	Dec
chips	$	$8,012	$1.5	$0.8	$1.0	$0.5	$0.4	$0.2	$0.2	$0.2	$0.3	$0.7	$1.1	$1.2
stick	$	$6,913	$1.3	$0.7	$0.9	$0.4	$0.3	$0.2	$0.1	$0.2	$0.3	$0.6	$0.9	$1.0
pellets	$	$6,467	$1.2	$0.6	$0.8	$0.4	$0.3	$0.2	$0.1	$0.1	$0.3	$0.6	$0.9	$0.9

Assumes no solar thermal system

Energy Savings		total	Jan	Feb	Mar	Apr	May	Jun	Jul	Aug	Sep	Oct	Nov	Dec
chips	$	$8,773	$1.6	$0.9	$1.1	$0.6	$0.4	$0.2	$0.2	$0.2	$0.4	$0.8	$1.2	$1.3
stick	$	$7,860	$1.5	$0.8	$1.0	$0.5	$0.4	$0.2	$0.2	$0.2	$0.3	$0.7	$1.1	$1.1
pellets	$	$7,490	$1.4	$0.7	$1.0	$0.5	$0.4	$0.2	$0.2	$0.2	$0.3	$0.7	$1.0	$1.1

Assumes a solar thermal system is installed and provides 17 percent of annual heating energy (Chickaloon prelim study)

Figure 2.4

Note that the last two segments of Figure 2.4 show the savings with and without the solar thermal system.

2.5 Cost Estimate

The construction cost estimate is provided below. These what are commonly referred to as the "hard costs". The remaining soft costs, fees, permits, etc, are detailed in Section 1.

Construction Cost Estimate

Tag	description	quantity	units	lump sum/ material	labor	chip-fired total	stick-fired total	pellet-fired total
1	chip fired boiler	1.00	ea	29,000		$29,000		
2	install	1.00	ls		2,470	$2,470		
3	freight	1.00	ea	2,400		$2,400		
4	accessories	1.00	ls	900		$900		
5	material handling	1.00	ea					
6								
7	stick fired boiler (3)	1.00	ea	14,640			$14,640	
8	install	1.00	ls		4,150		$4,150	
9	freight	1.00	ea	4,010			$4,010	
10								
11	pellet fired boiler	1.00	ea	9,758				$9,758
12	install	1.00	ls		1,579			$1,579
13	freight	1.00	ea	1,500				$1,500
14	accessories	1.00	ls	1,338				$1,338
15	material handling	1.00	ea	3,200				$3,200
16								
17	boiler stack	20.00	ft	50		$1,000	$1,000	$1,000
18	building addition 8x20	160.00	sf	75		$12,000	$12,000	$12,000
19	mechanical room piping	1.00	ls	3,500		$3,500	$3,500	$3,500
20	connection to ex system	2.00	ls	4,660		$9,320	$9,320	$9,320
21	primary pump	1.00	ea	1,025	150	$1,175	$1,175	$1,175
22	heat exchanger	1.00	ea	1,110	225	$1,335	$1,335	$1,335
23	400 gal storage tank	1.00	ea	3,569		$3,569	$3,569	$3,569
24								
25	pex piping	300.00	ft	21.25		$6,375	$6,375	$6,375
26	insul boards	19.00	boards	8.50	10.38	$359	$359	$359
27								
28	electrical in mech room	1.00	ls	1,500		$1,500	$1,500	$1,500
29								
30	controls point cost	8.00	pts	1,000		$8,000	$8,000	$8,000
31	controls panel	1.00	ea	3,500		$3,500	$3,500	$3,500
32	controls labor	25.00	hr		75	$1,875	$1,875	$1,875
33					mechanical subtotal	$73,403	$61,433	$56,008
34				general conditions	0.030	$2,202	$1,843	$1,680
35				rentals, small tools	0.020	$1,468	$1,229	$1,120
36				margin	0.100	$7,340	$6,143	$5,601
37					mechanical total	$84,413	$70,648	$64,409
38								
39					electrical subtotal	$1,500	$1,500	$1,500
40				general conditions	0.250	$375	$375	$375
41				rentals, small tools	0.050	$75	$75	$75
42				margin	0.250	$375	$375	$375
43					electrical total	$2,325	$2,325	$2,325
44								
45					controls subtotal	$13,375	$13,375	$13,375
46				general conditions	0.025	$334	$334	$334
47				rentals, small tools	0.015	$201	$201	$201
48				margin	0.100	$1,338	$1,338	$1,338
49					controls total	$15,248	$15,248	$15,248
50								
51						chip-fired	stick-fired	pellet-fired
52					total construction	$101,986	$88,220	$81,982

Appendix 1. Site Photos

Figure 1. Front view of the maintenance building and environmental office.

Figure 2. Rear view where pellet boiler shed will be added.

Figure 3. Tribal admin building 100' behind shop building

Figure 4. Current oil boiler

Appendix B. Brochure for the Froling Pellet Boiler

TARM BIOMASS®
Innovative Leaders in Alternative Heating Solutions

froling

P4

Pellet Boiler

- Fully automatic
- Super high efficiency
- Bulk or bag wood pellet ready
- Plug & play – no assembly
- Includes solar-thermal controls for easy integration
- Very clean
- Very safe

Visit www.woodboilers.com for more information about this boiler including videos and installation planning documents.

P4

Fröling P4 Applications

- stand alone boiler or add on to your existing fossil-fuel heating system
- can provide domestic hot water
- hydronic heating systems such as radiant floor, baseboard, and hydro-air

Pellet Boiler

Independence and Self-reliance

Fröling P4 boilers provide a convenient, safe and environmentally responsible way to heat your home and hot water with wood pellets. P4 homeowners are assured of unusually high heating efficiency, low heating costs, and use of an abundant, locally available, renewable fuel. With its ingenious, fully automated operation, this boiler is amazingly easy to use.

Innovation

- Pneumatic pellet feed is ideally suited for bulk fuel applications, although the P4 may be used with bagged fuel.
- Variable speed induced draft fan ensures optimal fuel-to-air ratio.
- Incoming combustion air temperature is raised with an integrated pre-heating system.
- Cascade control system for systems requiring multiple boilers.
- Multiple-pass heat exchanger and automatic heat exchange cleaning provide maximum efficiency and exceptional fly ash separation.
- Integrated storage tank control.
- Rated outputs from 36k BTU/hr to 200k BTU/hr.
- Systems to 800k BTU/hr.
- Exhaust temperatures under 250°F.
- Must be installed with a moderately sized buffer tank to reduce on/off cycling for optimal efficiency.
- Ash separation to two drawers.
- Virtually silent operation.

Bulk Delivery

As the North American pellet market matures, more and more people are able to take advantage of bulk fuel delivery. With bulk delivery, a pellet fuel truck delivers several tons of loose pellets to your home fuel storage bin or silo. The pneumatic feed device built into the P4 automatically delivers these pellets to your boiler as needed. The convenience of fossil fuel delivery with the economic and environmental benefits of biomass is what some would call the ultimate solution for your home heating needs.

For those who do not have access to bulk pellet delivery, the P4 may easily be used with bagged fuel.

Pellet Storage Systems

There are several options available for pellet storage:

Auger/pneumatic—ideal for rectangular rooms with front-end removal. Complete emptying guaranteed due to deep and horizontal position of the delivery screw. Use with the suction system for flexible boiler setup.

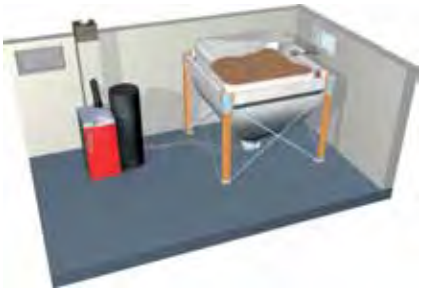

Bag silo—flexible, simple and easy to assemble. Dustproof and flood proof, this system can be installed outside with the addition of rain and sun covers.

Universal Suction— Three suction probes positioned uniformly provides complete emptying of the pellet store room.

About Tarm Biomass®

Tarm Biomass® is a third-generation, family-owned business that has pioneered the sales and service of residential central heating equipment in North America for over 30 years. TarmBiomass'® primary objective is to offer innovative home heating solutions, along with a significant commitment to consumer education and environmental awareness. Exclusive partnerships with ISO 9001 certified manufacturers allows Tarm Biomass® to offer products with operational reliability, unique firing efficiency, and to promote the clean burning of carbon-cycle biomass that is critical to the lowering of net greenhouse gas emissions.

About Fröling

Founded in 1961, Fröling is a family-owned company located in Grieskirchen, Austria. A pioneer in wood-fired heating systems, Fröling has devoted decades of intensive R&D to the study of maximum energy efficiency.

Features

- Over 85% efficiency
- automatic ignition
- automatic sliding grate in combustion chamber
- insulated cleaning door for heat retention
- soundproofing for almost silent operation

Advantages

The P4's compact design allows for easy positioning, even in a confined space. The disassembled unit fits through a 36" door. It arrives fully wired and ready for use. An integrated silencer ensures quiet operation.

How it Works

The P4 represents the most advanced residential pellet boiler technology available. Fully automatic ignition, coupled with a programmable user interface, automatic fuel feed and automatic ash removal means the P4 is extremely easy to use and requires very little maintenance. Please visit our website for a complete overview.

Lambdatronic P 3200 control system

This large, clear control unit with an adjustable viewing angle provides English language prompts in a logical menu system. Diagnoses and trouble-shoots all boiler systems. Brilliantly engineered for easy operation using today's most advanced control technology.

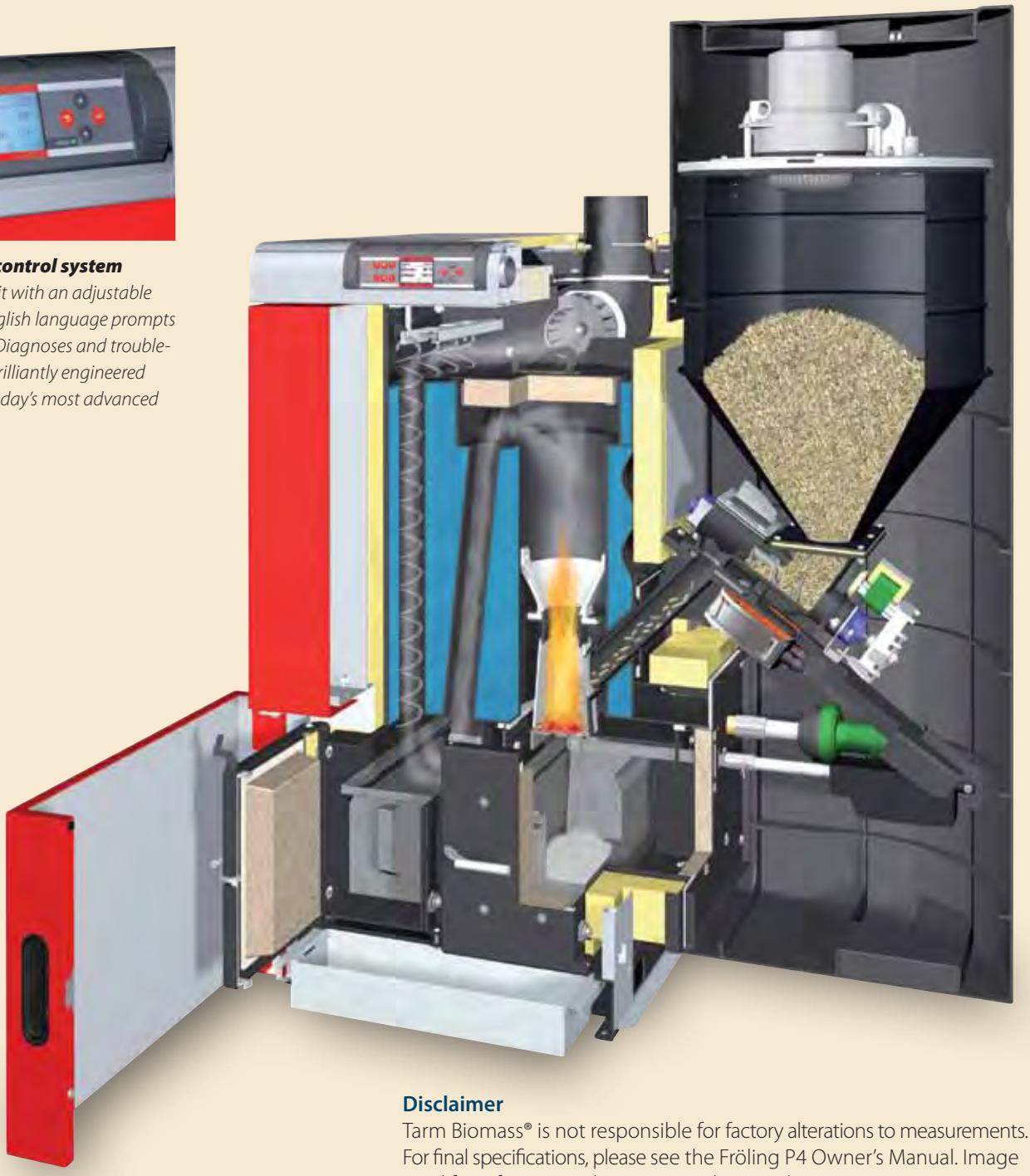

Disclaimer

Tarm Biomass® is not responsible for factory alterations to measurements. For final specifications, please see the Fröling P4 Owner's Manual. Image used for informational purposes only. Actual appearance may vary.

TARM BIOMASS®
Innovative Leaders in Alternative Heating Solutions

RECYCLED
Paper made from recycled material
FSC® C103525

BTEC

4 Britton Lane | P.O. Box 285 | Lyme, NH 03768 | 800.782.9927 | info@tarmbiomass.com | www.tarmbiomass.com

Fröling sets new international standards for technology and design within their Austrian facility.

State-of-the-art robotics technology within Fröling's manufacturing plant.

European innovation extends to every facet of Fröling's state-of-the-art facilities.

Technical Data		Model 8	Model 15	Model 20	Model 25	Model 32	Model 38	Model 48	Model 60
Rated heat output	BTU/hr	35,800	50,800	68,200	85,300	109,000	129,650	163,800	200,000
Rated heat output	kW	10.5	14.9	20.0	25.0	32.0	38.0	48.0	58.5
Heat output range	kW	3.1-10.5	3.1-14.9	6-20.0	7.5-25.0	8.9-32.0	8.9-38.0	14.4-48.0	17.3-58.5
Electrical power consumption (@240V)*	W	96	123	110	110	110	110	120	120
Water capacity	US gallons	18.5	18.5	21	21	33	33	45	45

*Numbers shown are normal operating figures. Peak intermittant consumption is higher.

Installation Data		Model 8/15	Model 20/25	Model 32/38	Model 48/60
Boiler					
length[1]	inches	29⅛	29⅛	32¼	35½
length w/induced draft fan	inches	37	37	40⅛	43¼
width[2]	inches	23⅝	30⅜	33¾	40½
width w/support	inches	27¾	34½	38	50¼
width w/feed cyclone	inches	46⅝	53⅜	56¾	70½
height[3]	inches	50⅜	50⅜	56⅜	62⅜
height w/feed cyclone	inches	65⅜	65⅜	74⅞	74⅞
Boiler dry weight[4]	pounds	706	882	1032	1675
Flue collar height	inches	53⅛	53⅛	60¼	66⅜
Flue pipe diameter	inches	5	5	6	6

1 Corresponds to the minimum poitioning length.
2 Width of the boiler including support for positioning unit. Corresponds to the minimum positioning length after removing the stoker fitment, suction cyclone and positioning unit.
3 Corresponds to the minimum positioning height after removing the stoker fitment, suction cyclone and positioning unit.
4 Specified weight refers to the boiler without ash removal module.

Pressure tested in accordance with EN 303-5, NON-ASME

Listed Appliance

TÜV AUSTRIA

June 2012