Healy Lake Biomass Pre-feasibility Study

Submitted to AWEDTG & Healy Lake

Greg Koontz, ME Bill Wall, PhD

July 26, 2013

Updated 8/13/13

Table of Contents

EXECUTIVE SUMMARY **3**
1.1 Acknowledgements **3**
1.2 Objective **3**
1.3 Sources **3**
1.4 Scope **4**
1.5 Modified Baseline Energy Consumption **4**
1.6 Resource Assumptions **5**
Cost Escalation Assumptions for Fuel 7
1.6 Summary of Economic Findings **8**
Benefit Cost Ratio 11
1.6 Next steps **13**
2 TECHNICAL SUMMARY **14**
2.1 Existing Conditions **14**
2.2 Wood Fuels / Wood Fired Heating Equipment **14**
Boiler Maintenance 15
2.3 Proposed Configuration **17**
Wood Chip Requirements, Storage and Handling 19
2.4 Energy Savings **20**
Additional Benefits for Community Sustainability 20
2.5 Cost Estimate **21**
Appendix 1.0 Site Photos **22**
Figure 1. Heally Lake Washateria showing 4000 gallon fuel tank 22
Figure 2. Washateria front view 22
Figure 3. Front view of community hall 23
Figure 4. Unheated walkway connector between community hall and washateria 23
Figure 5. Rear view of Washateria 24
Figure 6. Washateria boiler room 24
Figure 7. Hot water fed hat air unit installed by community post Washateria construction 25
Appendix 2.0 P&M Boiler Brochure **26**

EXECUTIVE SUMMARY

1.1 Acknowledgements

This feasibility study was supported by the Alaska Wood Energy Task Group and administered by the Fairbanks Economic Development Corporation.

1.2 Objective

The objective of this report is to document the results of a pre-feasibility study performed for the Village of Healy Lake. Buildings in the Village are currently heated with oil, often with a wood stove as back-up. The subject of the study is the feasibility of converting the washateria and the community hall included in the study to utilize an automated wood-fired heat boiler as the primary source.

Feasibility studies are often classified as Level 1 (L1), Level 2 (L2), or Level 3 (L3). Level 1 studies consist of very rough calculations on a small number of important metrics (unit fuel costs, etc). Some refer to L1 studies as "back-of-the-envelope" calculations.

At the other end, L3 studies are commonly called "investment grade studies"; the level of detail and calculation is so high that one could use the results of an L3 study to get an outside entity to fund the implementation of the project.

Level 2, then, is the bridge between L1 and L3; it is a screening study done to determine if it is worth the time and expense to initiate an L3 study. Level 3 studies are generally quite expensive and thus not entered into lightly. The L2 study helps decision makers determine which aspects, if any, of a proposed project are worth the expense of an L3 study.

An L1 study can be done remotely; an L2 study requires at least a minimum amount of site observation of existing conditions, conversations with the affected parties, and research with second-order parties (local foresters, vendors, local contractors, etc). This is a Level 2 study.

Sustainability, Inc (SI) and efour, PLLC (efour) perform L2 and L3 studies across the state of Alaska, from cities to small rural villages. We use the same performance and economic models for each type of study; for us, the primary difference between the two studies is the quality of the inputs, which is generally a function of how much time has been spent gathering information and the depth of that information.

1.3 Sources

The primary sources of information that inform this study are data collected on site by SI and data provided by the Fairbanks Economic Development Corporation (FEDC). Data collected on site by SI include existing site conditions, equipment name plate data, current energy cost data, and equally important, information gathered by talking to the local stakeholders in the Village.

In addition to the site knowledge gathered by SI, additional biomass boiler performance and cost data have been accumulated over the past several years from working with local engineers and contractors, and from performing multiple L2 and L3 wood-fired feasibility studies.

Hourly weather data for the performance model was taken from data collected and reported by Fairbanks International Airport. Although hourly airport weather data are reported for some villages that are quite small, in this case Fairbanks is the airport nearest to Healy Lake that reports hourly.

1.4 Scope

In Healy Lake, the scope of this report is limited to two buildings; the Washeteria and the Margaret Kirsteatter Community Hall (the Community Hall). Currently, the Washeteria is heated by an oil boiler. The Washeteria provides clean drinking water, washing and drying facilities, and shower facilities to the entire Village. The Community Hall has a wood stove, but the Washeteria boiler piping has also been modified to provide hot water to a fan – coil unit in the Community Hall, that blows hot air into the building and provides a level of background heat. The buildings are connected by a covered walkway, so piping between the two is simple and requires no buried pipe or trenching. The Community Hall has a full kitchen with plumbing. The intent is to heat the Hall for elders daily lunches and to keep the kitchen function year round.

Biomass heating systems can be expensive to install; the economics generally work better for larger buildings, or where two or more smaller buildings can be grouped together and served by a single biomass boiler, using piping between the buildings to distribute the heat.

Taken alone, either of the two buildings in this study is would be at best marginally large enough to justify a biomass boiler – the first costs are so high that the project economics are unfavorable. Healy Lake recognized this, and proposed grouping these two buildings into a common biomass heating plant. This premise is the basis of this study.

In evaluating this premise, this study makes a very significant assumption; it uses a modified baseline. This is described in detail in the next subsection.

1.5 Modified Baseline Energy Consumption

Baseline energy consumption is what one would expect – it is the historical energy consumption of a heating system prior to any subsequent modification. In this case, however, the Community Hall has largely been un-used recently. Even when it was used in the past, the wood stove was the heat source.

Now, however, the Village would like to bring the Community Hall into more regular use. To do so, they recognize that a wood stove is not an appropriate heating system for a building that is occupied every day, or almost every day, and at differing times of day. For that type of occupancy, an automated heating system based on a boiler is required.

In the absence of a biomass boiler system, the Village would have no choice but to install an oil boiler to heat the Community Hall. This study, therefore, estimates the amount of oil that would be required to heat the Community Hall, and uses that as the Baseline Consumption, or in this case, the Modified Baseline consumption.

Given that this is a Level 2 study, the calculation of the estimated annual Community Hall consumption was relatively simple. We found a building with a similar relative size in a different village (Chickaloon).

The "sample building" consumes 1,818 gallons of oil per year, and is 3,400 sq.ft – or 0.535 gal / yr / sf. However, the sample building is located in a village where the minimum annual outside air temperature is -21 deg F. In Healy Lake, the corresponding value is -51 deg F.

If we assume that building space heating begins when the temperature reaches 61 deg F, then the peak load in Healy Lake should be about (61 - -51) / (61 - -21) = 1.37 times the load in Chickaloon. Multiplying 0.535 gal/yr/sf * 1.37 yields 0.73 gallons / year / sf - we rounded this down to 0.7.

Our Modified Baseline consumption for the Community Hall is therefore 0.7 gal/yr/sf * 2,550 sf = 1,785 gal/yr of No. 1 oil. This is the value used as the baseline Community Hall consumption for this study.

1.6 Resource Assumptions

SI and efour often perform studies on villages in rural Alaska; off the road system. In these villages, biomass boilers generally have only two possible forms of fuel, wood chips or stick wood, both of which they must produce themselves from local forests. Villages on the road system, however, have a third option; wood pellets produced elsewhere and trucked to the village. For Healy Lake, however, pellets are not a viable option. The performance and economic models we use automatically evaluate all three fuel types, but in all the Figures reproduced in this report, we have "grayed out" the pellet option even though it is possible to import pellets in winter using an ice road, the overall economics to the village are not the same. However, should the village choose this fuel the analysis is available. The basic concept of import substitution is a basic approach we try to encourage when it makes the most sense relative to costs and capacity of the village to reduce dependence on imports.

For this study, we have considered chip-fired boilers to be the preferred option, although the performance and economics must speak for themselves. The primary advantage of chip-fired boilers (and pellet boilers) is the level of automation available.

One reason oil fired boilers are so popular is that oil is easily transported and stored, the boilers are simple and reliable, and thus as long as the oil tank is kept full, one has a reasonable expectation that the boiler(s) will continue to operate and maintain space temperature. To make sure this happens, there are often two boilers, each sized for 100 percent of the load (one lead and one back-up). This is the case at the Washeteria.

Pellet-fired boiler technology has progressed to the point where they are almost as simple, reliable and automatic as oil fired boilers. However, they have been ruled out here because Healy Lake is not on the road system. Lately, however, the introduction of European and Canadian technology for chip-fired boilers has brought them to a level of ease and reliability that is quite close to that of pellet boilers.

SI and efour use two manufacturers of chip-fired boilers for these studies – Portage and Main (Canada) is the "basis of design" boiler for smaller applications, and Wiessmann (Germany) is the basis of design for larger chip-fired boilers. The boiler proposed for Healy Lake is a Portage and Main 500 (see Appendix A).

Stick-fired boilers are included in the model analysis, but have not figured in the discussions above. Stick wood is almost always the cheapest form of fuel in terms of $/BTU, and is always available in the

villages (or can be collected locally). However, there are no small-scale stick-fired boilers that have automated feed systems – they must be fed manually every few hours (as often as every four hours in cold weather) if one wants to displace the maximum amount of fuel oil. This generally rules them out, simply because the requirement to manually feed a boiler every four hours in negative 35 deg F weather is not very appealing. In terms of the economic model, if this manual feeding labor is accounted for in the model, then this generally reduces the economics of the stick-wood boilers as an option.

Our model presents the results for all three fuel forms, but in Healy Lake, we are recommending a small chip-fired boiler as the best overall benefit for the community.

Figure 1.1 below shows the assumptions that have been made for the existing fuels in the Village.

Village Energy Cost / Properties

description	value	units
oil heat content	134.00	kBTU/gal
low village oil cost	$6.00	per gal
high village oil cost	$6.00	per gal
electrical energy to village	$1.200	per kWh

Figure 1.1

Figure 1.2 shows the assumptions made for the cost of wood fuel, in various forms.

Wood Costs

description	value	units
wood chips, to DH	$125.00	green ton
stick wood, split, to DH	$250.00	cord
pellets, to DH	$325.00	ton
bricks, to DH		ton

Figure 1.2

Because each form of fuel has different heat content, and is sold in differing units, direct comparisons of the data in Figures 1 and 2 are very difficult. To make the comparison simple, all these energy sources are converted to a common unit, one million BTU (1 mmBTU).

To make the comparison even more relevant, the conversion efficiency of each source has been factored in. In this case, the conversion efficiency is the boiler efficiency. It is different for each fuel – using drier wood results in better boiler efficiency, and the oil boilers have their own efficiencies as well. In Figure 1.3 below, therefore, the mmBTUs references are those coming out of the boiler into the space, not the gross heat content of the fuel going into the boiler.

Unit Energy Costs, comparison (to village, boiler eff accounted for)		
description	value	units
low oil	$53.30	per mmBTU
high oil	$53.30	per mmBTU
electrical energy	$351.70	per mmBTU
recovered heat		per mmBTU
wood chips	$14.82	per mmBTU
stick wood	$20.38	per mmBTU
pellets	$23.85	per mmBTU
propane		per mmBTU

Figure 1.3

As expected, chips and stick wood are the least expensive, followed closely by wood pellets. Oil is two and a half times as much as wood, and electrical energy is beyond expensive; it is ten times the cost of wood.

Cost Escalation Assumptions for Fuel

Escalation in bush Alaska does not necessarily operate as it does in the lower 48, or even as it does in other parts of Alaska. An entire year's worth of oil for a village, for instance, is often delivered by barge within a 2- 3 month window when river conditions allow it. Thus the price might constant for an entire year, regardless of what happens to oil prices between the last barge of one year and the first of the next year. If the barge company did not sell out of oil in the first, then that oil price might apply for two years (especially if the year one cost was high and the year two cost dropped).

So oil costs in the bush escalate in a step-wise fashion, nevertheless, they do escalate over time, and we attempt to choose a rate that provides a smooth, but reasonable prediction of future prices. At the same time, we try to avoid using escalation rates that are so extreme that the escalation rate alone makes the project viable.

Over a 20 year time frame, even a "dog-of-a-project" can be made to look good if (for example) wood is escalated at 3 percent a year, and oil is escalated at 8 percent a year. And yet, within the last few years, oil was for a period escalating at 8 plus percent a year. For studies done during that period, one could justify using an 8 percent escalation, but one would likely be disappointed if the project financial depended on that rate remaining constant for 20 years.

In the Level 2 stage, we prefer to see if the project stands on its own, without relying on escalation. In general, we use very low values, knowing they are likely conservative. For Alaskan villages, our current escalation rates are 4.5 percent for oil, and 1 percent for wood. The reasoning for this is simple.

A long-term escalation rate of 4.5 percent seems to be supported in Alaska, so we use that value as a lower bound. Labor tends to escalate at a lower rate (closer to 3 percent) and in fact wages have been stagnant in the US for several years. In the villages, wage rates have little correlation to other markets, so we assumed a low escalation rate for labor.

In most cases in Alaska, the wood itself belongs to the village, so its value is whatever the village says it is – there is no underlying correlation to other market factors (there is no other market they can sell it into) – so we assume the escalation rate of the wood to be zero. However, that wood has to be processed and transported, although over smaller distances than most biomass, and that requires labor and oil (or gasoline). Therefore, while we make no assumption that the cost of the underlying wood will change with time, we use a one percent overall escalation rate for processed wood fuel based on the assumption that the oil/gas/labor costs associated with processing and transportation will escalate the fuel costs at 1.0 percent.

Again, a Level 2 study is a screening study, and we believe that at this level, the project really should prove its viability without relying on high rates of escalation. So we use the lowest reasonable rate that we believe exists for oil, and then ratio the other rates down from there, based on their dependency on outside market factors (in this case, petroleum). Electrical energy, for instance, is escalated at 3.0 percent in the model because it is much more dependent on oil prices than wood fuel (but not directly correlated).

The intent in the Level 2 study is to get the escalation rate ratios "in-the-ballpark", and get the overall values as low as possible to minimize their impact on the financials. In the Level 3 study, the escalation rates will be set by the entity financing the project, based on their due diligence, and the future rate risk they wish to take on. As noted above, any project that relies on consistently high or widely divergent escalation rates would be considered very risky from a financial standpoint, and unlikely to get implemented. We would actually prefer to use zero percent for all rates at the L2 level, just to ensure the underlying project is valid regardless of future rates; instead, we use the lowest rates we feel we can use and worry more about the ratio of the rates that the values themselves.

In terms of risk, the reasoning is:

1) If the cost of processing wood goes up significantly, the likely cause is that the cost of oil went up significantly.
2) The cost of oil makes up 100 percent of the cost of fuel for an oil-fired boiler.
3) The cost of oil makes up only a fraction (although a significant fraction) of the cost of processed wood fuel, THUS
4) Oil will always escalate faster than wood fuel – we simply chose to minimize this effect in the Level 2 study for the reasons stated above.

1.6 Summary of Economic Findings

The following Figures summarize the performance and economic modeling that SI and efour performed. As noted above, we show the results for pellet, chip and stick fired boilers, but we would only recommend the use of chip boilers in this case. The text of this section, therefore, deals primarily with the chip-fired option.

Figure 1.4 below shows the overall economic summary.

Exec Summary table

line items	chip fired boiler	stick fired boiler	pellet fired boiler
estimated project implementation cost	$130,273	$114,629	$115,565
base fuel cost (existing)	$39,510	$39,510	$39,510
proposed fuel cost	$11,694	$14,565	$15,746
estimated annual fuel savings	$27,816	$24,945	$23,764
(1) estimated additional maintenance	$500	$500	
total estimated savings	$27,316	$24,445	$23,764
net simple payback	4.8 yrs	4.7 yrs	4.9 yrs
fraction of oil displaced	1.000	1.000	1.000

(1) see text for explanation

Figure 1.4

As footnote (1) indicates, we have estimated the increase in annual maintenance for chip and stick fired boilers at $500 per year (the estimated increase for pellets boilers would be zero). Chip systems are highly automated; we expect no increase in the amount of time a person has to spend compared to an oil-fired system, but we allow $500/yr for parts and upkeep. Also the cost of chips includes the cost of feeding the boiler with chips. Thus all three of the projects are viable economically and the village will need to make a choice regarding which boiler type to select.

It was noted above that biomass boiler projects require a certain scale in order to be truly economical. Individually, the two buildings in Healy Lake are small as biomass projects; together they make a much more viable project. This is reflected in the net simple payback of the project, roughly 5 years.

Figure 1.4 is based on current fuel costs; these will not stay the same. Thus we present a 20 year cash flow the project (chips only). In this cash flow, the cost of all fuels is escalated, although not at the same rate. Wood is assumed to increase in cost at a slower rate than oil, because the resource is local and renewable. The escalation rates used are shown in Figure 1.5.

Escalation Factors

liquid fuel	0.045	per year
electrical energy	0.030	per year
recovered heat	0.030	per year
wood chips	0.010	per year
stick wood	0.010	per year
wood pellets, bricks	0.010	per year

Figure 1.5

Using these factors results in the following 20-year cash flows.

Cash Flow | Chips

yr	existing	proposed	Savings
1	$39,510	$11,694	$27,816
2	$41,280	$11,811	$29,469
3	$43,129	$11,930	$31,200
4	$45,062	$12,049	$33,013
5	$47,080	$12,169	$34,911
6	$49,190	$12,291	$36,899
7	$51,393	$12,414	$38,979
8	$53,696	$12,538	$41,158
9	$56,101	$12,663	$43,438
10	$58,615	$12,790	$45,824
11	$61,240	$12,918	$48,323
12	$63,984	$13,047	$50,937
13	$66,851	$13,178	$53,673
14	$69,845	$13,309	$56,536
15	$72,975	$13,443	$59,532
16	$76,244	$13,577	$62,667
17	$79,660	$13,713	$65,947
18	$83,228	$13,850	$69,378
19	$86,957	$13,988	$72,969
20	$90,853	$14,128	$76,724

Figure 1.6

In essence, the savings are projected to almost triple by year 20. Similar results would have occurred with both the stick-fired boiler and the pellet fired boilers.

The final Figure of this subsection is a summary of the cost estimate. The complete construction estimate is contained in subsection 2.5.

Cost Estimate Summary

		chip fired boiler	stick fired boiler	pellet fired boiler
construction cost subtotal		$100,421	$87,806	$88,561
(see section 2.5 for est)				
design	0.100	$10,042	$8,781	$8,856
bid assistance	0.005	$502	$439	$443
cons admin	0.080	$8,034	$7,024	$7,085
Cx/start up	0.005	$502	$439	$443
contingency	0.050	$5,021	$4,390	$4,428
soft costs subtotal		$24,101	$21,073	$21,255
percent of construction cost		24.0%	24.0%	24.0%

estimated permits	$5,000	$5,000	$5,000
estimated review fees	$750	$750	$750
permits / fees subtotal	$5,750	$5,750	$5,750
estimated total costs	**$130,273**	**$114,629**	**$115,565**

Figure 1.7

Benefit Cost Ratio

The benefit to cost ratio is an attempt to capture the value of the project over the lifetime of the project. A lifetime of 20 years is commonly used. The output of the calculations included is actually two numbers, the actual benefit/cost ratio, and the net present value (NPV) of the project.

The project cost is a one-time event, but the savings accrue over the life of the project. Depending on the assumed inflation rate of the various fuel sources, the savings may actually increase each year (if, for instance, oil rises faster than biomass, as we have assumed). On the other hand, a dollar saved in year 20 is not worth a dollar today; it is worth the NPV of one dollar, at the assumed discount rate. The discount rate is the rate of return one assumes one could make if that dollar were invested in some other fashion – in a bank account, or on another project. The combination of one time and recurring costs, plus inflation and discounting means that it would be very useful if the lifetime benefits, divided by the lifetimes costs, could be boiled down to one number; the benefit to cost ratio.

The current year is always year zero for the calculation, and it is generally assumed that construction would be completed in year one (or, for a long process or project, year two). The NPV of the project cost for a project completed in year one is almost, but not quite the same as the project cost; it has only been discounted one year. This is the COST part of the ratio. The BENEFIT is the NPV of the stream of savings (fuel savings, in this case) that the project generates over the 20 year lifetime. Divide the Benefit (in dollars) by the Cost (in dollars), and you get the dimensionless Benefit to Cost ratio; generally, any value over 1.00 is considered good, but different agencies have different target values.

The NPV benefit is simply the NPV of the combined (savings minus cost) Cost and Savings cash flow over 20 years. In the year the project is constructed, the "savings stream" is negative, because the discounted project cost is much greater than the yearly savings – all other years, the savings are positive. Take the NPV of that cash stream, and that is the NPV benefit of the project. Unlike the ratio, this value only really tells one something useful when compared to another variant of the same project, or another project that would use the same initial cash input. The project with the higher NPV benefit (in dollars) is generally better.

Figure 1.8 has three tables one each for the benefit cost ratio for each of the boiler types.

Benefit to Cost Ratio | wood chips — Healy Lake

									discount rate for oil / propane	0.030				
									discount rate for biomass	0.010				
			project fuel use and cost, current heating configuration							predicted energy use / cost			NPV calcs for B/C	
		project capital cost	oil gal	unit cost $/gal	cost	propane gal	unit cost $/gal	cost	total fuel cost	predicted biomass useage GT/yr	unit cost $/ton	cost	savings	net benefit
	2013		6,585	$6.00	$39,510				$39,510	84.75	$125	$10,594		
1	2014	$130,273	6,585	$6.18	$40,695				$40,695	84.75	$126	$10,700	$29,996	($100,277)
2	2015		6,585	$6.37	$41,916				$41,916	84.75	$128	$10,807	$31,109	$31,109
3	2016		6,585	$6.56	$43,174				$43,174	84.75	$129	$10,915	$32,259	$32,259
4	2017		6,585	$6.75	$44,469				$44,469	84.75	$130	$11,024	$33,445	$33,445
5	2018		6,585	$6.96	$45,803				$45,803	84.75	$131	$11,134	$34,669	$34,669
6	2019		6,585	$7.16	$47,177				$47,177	84.75	$133	$11,246	$35,931	$35,931
7	2020		6,585	$7.38	$48,592				$48,592	84.75	$134	$11,358	$37,234	$37,234
8	2021		6,585	$7.60	$50,050				$50,050	84.75	$135	$11,472	$38,578	$38,578
9	2022		6,585	$7.83	$51,552				$51,552	84.75	$137	$11,586	$39,965	$39,965
10	2023		6,585	$8.06	$53,098				$53,098	84.75	$138	$11,702	$41,396	$41,396
11	2024		6,585	$8.31	$54,691				$54,691	84.75	$139	$11,819	$42,872	$42,872
12	2025		6,585	$8.55	$56,332				$56,332	84.75	$141	$11,937	$44,394	$44,394
13	2026		6,585	$8.81	$58,022				$58,022	84.75	$142	$12,057	$45,965	$45,965
14	2027		6,585	$9.08	$59,762				$59,762	84.75	$144	$12,177	$47,585	$47,585
15	2028		6,585	$9.35	$61,555				$61,555	84.75	$145	$12,299	$49,256	$49,256
16	2029		6,585	$9.63	$63,402				$63,402	84.75	$147	$12,422	$50,980	$50,980
17	2030		6,585	$9.92	$65,304				$65,304	84.75	$148	$12,546	$52,758	$52,758
18	2031		6,585	$10.21	$67,263				$67,263	84.75	$150	$12,672	$54,591	$54,591
19	2032		6,585	$10.52	$69,281				$69,281	84.75	$151	$12,798	$56,483	$56,483
20	2033		6,585	$10.84	$71,359				$71,359	84.75	$153	$12,926	$58,433	$58,433
	sum	$130,273			$1,133,008				$1,133,008			$246,192	$857,900	$727,627
	NPV	**$126,478**			$805,544				$805,544			$178,786	**$616,644**	**$490,166**
									benefit to cost ratio	4.875				
									NPV net benefit	$490,166				

Benefit to cost ratio for the P&M chip fired boiler is 4.875 and the NPV net benefit is $490,166. This project is economically viable.

Benefit to Cost Ratio | stick wood — Healy Lake

									discount rate for oil / propane	0.030				
									discount rate for biomass	0.010				
			project fuel use and cost, current heating configuration							predicted energy use / cost			NPV calcs for B/C	
		project capital cost	oil gal	unit cost $/gal	cost	propane gal	unit cost $/gal	cost	total fuel cost	predicted biomass useage cord/yr	unit cost $/cord	cost	savings	net benefit
	2013		6,585	$6.00	$39,510				$39,510	58.25	$250	$14,563		
1	2014	$114,629	6,585	$6.18	$40,695				$40,695	58.25	$253	$14,708	$25,987	($88,642)
2	2015		6,585	$6.37	$41,916				$41,916	58.25	$255	$14,855	$27,061	$27,061
3	2016		6,585	$6.56	$43,174				$43,174	58.25	$258	$15,004	$28,170	$28,170
4	2017		6,585	$6.75	$44,469				$44,469	58.25	$260	$15,154	$29,315	$29,315
5	2018		6,585	$6.96	$45,803				$45,803	58.25	$263	$15,305	$30,497	$30,497
6	2019		6,585	$7.16	$47,177				$47,177	58.25	$265	$15,458	$31,719	$31,719
7	2020		6,585	$7.38	$48,592				$48,592	58.25	$268	$15,613	$32,979	$32,979
8	2021		6,585	$7.60	$50,050				$50,050	58.25	$271	$15,769	$34,281	$34,281
9	2022		6,585	$7.83	$51,552				$51,552	58.25	$273	$15,927	$35,625	$35,625
10	2023		6,585	$8.06	$53,098				$53,098	58.25	$276	$16,086	$37,012	$37,012
11	2024		6,585	$8.31	$54,691				$54,691	58.25	$279	$16,247	$38,444	$38,444
12	2025		6,585	$8.55	$56,332				$56,332	58.25	$282	$16,409	$39,922	$39,922
13	2026		6,585	$8.81	$58,022				$58,022	58.25	$285	$16,574	$41,448	$41,448
14	2027		6,585	$9.08	$59,762				$59,762	58.25	$287	$16,739	$43,023	$43,023
15	2028		6,585	$9.35	$61,555				$61,555	58.25	$290	$16,907	$44,649	$44,649
16	2029		6,585	$9.63	$63,402				$63,402	58.25	$293	$17,076	$46,326	$46,326
17	2030		6,585	$9.92	$65,304				$65,304	58.25	$296	$17,247	$48,057	$48,057
18	2031		6,585	$10.21	$67,263				$67,263	58.25	$299	$17,419	$49,844	$49,844
19	2032		6,585	$10.52	$69,281				$69,281	58.25	$302	$17,593	$51,688	$51,688
20	2033		6,585	$10.84	$71,359				$71,359	58.25	$305	$17,769	$53,590	$53,590
	sum	$114,629			$1,133,008				$1,133,008			$338,423	$769,638	$655,008
	NPV	**$111,291**			$805,544				$805,544			$245,765	**$551,625**	**$440,334**
									benefit to cost ratio	4.957				
									NPV net benefit	$440,334				

The benefit to cost ratio for the stick fired wood boiler is 4.957 and the NPV for net benefit is $440,334.

Benefit to Cost Ratio | wood pellets — Healy Lake

									discount rate for oil / propane	0.030					
									discount rate for biomass	0.010					
			project fuel use and cost, current heating configuration							predicted energy use / cost			NPV calcs for B/C		
		project capital cost	oil gal	unit cost $/gal	cost	propane gal	unit cost $/gal	cost	total fuel cost	predicted biomass useage tons/yr	unit cost $/ton	cost	savings	net benefit
	2013		6,585	$6.00	$39,510				$39,510	48.45	$325	$15,746		
1	2014	$115,565	6,585	$6.18	$40,695				$40,695	48.45	$328	$15,904	$24,791	($90,774)
2	2015		6,585	$6.37	$41,916				$41,916	48.45	$332	$16,063	$25,853	$25,853
3	2016		6,585	$6.56	$43,174				$43,174	48.45	$335	$16,224	$26,950	$26,950
4	2017		6,585	$6.75	$44,469				$44,469	48.45	$338	$16,386	$28,083	$28,083
5	2018		6,585	$6.96	$45,803				$45,803	48.45	$342	$16,550	$29,253	$29,253
6	2019		6,585	$7.16	$47,177				$47,177	48.45	$345	$16,715	$30,462	$30,462
7	2020		6,585	$7.38	$48,592				$48,592	48.45	$348	$16,882	$31,710	$31,710
8	2021		6,585	$7.60	$50,050				$50,050	48.45	$352	$17,051	$32,999	$32,999
9	2022		6,585	$7.83	$51,552				$51,552	48.45	$355	$17,222	$34,330	$34,330
10	2023		6,585	$8.06	$53,098				$53,098	48.45	$359	$17,394	$35,704	$35,704
11	2024		6,585	$8.31	$54,691				$54,691	48.45	$363	$17,568	$37,123	$37,123
12	2025		6,585	$8.55	$56,332				$56,332	48.45	$366	$17,743	$38,588	$38,588
13	2026		6,585	$8.81	$58,022				$58,022	48.45	$370	$17,921	$40,101	$40,101
14	2027		6,585	$9.08	$59,762				$59,762	48.45	$374	$18,100	$41,662	$41,662
15	2028		6,585	$9.35	$61,555				$61,555	48.45	$377	$18,281	$43,274	$43,274
16	2029		6,585	$9.63	$63,402				$63,402	48.45	$381	$18,464	$44,938	$44,938
17	2030		6,585	$9.92	$65,304				$65,304	48.45	$385	$18,649	$46,655	$46,655
18	2031		6,585	$10.21	$67,263				$67,263	48.45	$389	$18,835	$48,428	$48,428
19	2032		6,585	$10.52	$69,281				$69,281	48.45	$393	$19,023	$50,258	$50,258
20	2033		6,585	$10.84	$71,359				$71,359	48.45	$397	$19,214	$52,146	$52,146
	sum	$115,565			$1,133,008				$1,133,008			$365,934	$743,310	$627,745
	NPV	**$112,199**			$805,544				$805,544			$265,743	**$532,231**	**$420,032**
									benefit to cost ratio	4.744				
									NPV net benefit	$420,032				

The benefit to cost ratio for the pellet boiler system is 4.744 and the NPV of net benefit is $420,932.

1.6 Next steps

Based on economics, the project is compelling. In addition, the project generates benefits to the Village beyond the obvious monetary ones. Among these are:

- Use of renewable resources
- Reliance on local, rather than remote energy sources
- Reduced carbon footprint
- Reduced secondary emissions (NOx, S, CO, etc)
- Increased fuel price stability (for future budget planning)
- Energy money spent remains in the local economy

There are no doubt others as well. As was noted above, a Level 2 study is a screening study, meant to provide enough information to the stakeholders to A) determine how to proceed next, B) determine whether to proceed, or C) halt the project until conditions improve. This study provides the information needed for Healy Lake villagers and other stakeholders to make these decisions; the next steps are up to them. All three types of boilers are economically viable. The major difference between chip and stick fired boilers is that the stick fired boiler requires hand feeding and to displace the most amount of fuel requires feeding the boiler at least 3 times per day. The chip fired boiler requires a chipper and chipping and feeding an auto feed boiler once per week with chips.

The pellet boiler is appealing as it is automated as well and requires less labor within the village. The major difference being less sustainability for the village, as they will be importing energy from outside rather than paying themselves to utilize their own local resources.

2 TECHNICAL SUMMARY

2.1 Existing Conditions

The following statistics in Figure 2.1 summarize the existing conditions in the two buildings.

Existing Conditions		Washeteria	Community Hall
heated area	sf	1,120	2,550
number of floors		1	1
frequency of usage		daily	weekly
age of original bldg	yrs	< 10 yrs	15 yrs
renovations/additions			
primary heat		oil boiler	wood stove
condition		moderate	
location		mech room	in space
hot water		off boiler	
(1) annual fuel consumption	gal	4,800	1,785

(1) modified baseline consumption for Community Hall

Figure 2.1

The proposed chip-fired boiler would displace all of the oil consumption of the two buildings; however, the existing systems would remain in place as back up. This is explained in more detail in 2.3.

2.2 Wood Fuels / Wood Fired Heating Equipment

The model that SI / efour uses for these feasibility studies calculates the properties of wood fuels based on: 1) species used (can be more than one), and 2) moisture content at time of burn. If more than one species is selected, the model calculates a "composite" value for the fuel. For example, if one used 70 percent of a specie/moisture with 6,000 BTU/lb and the remaining 30 percent had a specie/moisture heat content of 8,000 BTU/lb, the "composite fuel would have (0.7 * 6,00) + (0.3 * 8,000) = 6,600 BTU/lb. Figure 2.2 shows the calculated properties for the wood chips used in this analysis. The properties of pellets and stick wood are also calculated, but as noted above, the report is based on a chip-fired boiler.

Wood for Chips		MC at cut	MC at burn	weight fraction
1	Cottonwood, logs			
2	Birch, logs			
3	Aspen, logs	0.50	0.35	0.300
4	B Spruce, logs			
5	W Spruce, logs	0.50	0.35	0.700
6				
7				
8				
9				
10				
			checksum	1.000

Composite Chip Properties		
net useable heat	4,961	BTU/lb at burn MC
weight at cut MC	1.300	lb/lb at burn MC
density as stacked logs	22.396	lb/cf at burn MC
density as chips	22.869	lb/cf at burn MC
combustion air req	4.721	lb/wet lb at burn MC
combustion air req	64.683	cf/wet lb at burn MC
CO2 formed	1.2338	lb/wet lb at burn MC
SOx formed	0.0006	lb/wet lb at burn MC
ash	0.0199	lb/wet lb at burn MC
ash volume	0.0031	cf/wet lb at burn MC

Figure 2.2

The most pertinent value in the Figure is the net useable heat content, 4,961 BTU/lb.

There are a number of manufacturers of chip-fired boilers; the basis of design boilers used in this study are the boilers made by Portage and Main. The basic system components include:

- A chip bin, which holds bulk amounts of wood chips.
  - This bin is kept filled by the Village
  - The bin has a lid to keep water out
  - There is a shaker in the bin to keep the chips from bridging up and fouling the system
- A means of getting the pellets from the bin into the boiler (an auger)
- The boiler
  - The boiler uses onboard controls to modulate the firing rate to meet heating demand
  - Will remain on and operating as long as the bin is kept filled, and no fuel fouling occurs
  - Is a "hands-off" unit
- A thermal storage tank
  - This tank is basically a "wide spot in the pipe"
  - It hold large amounts of water, thus large amounts of heat
  - In essence, the boiler heats the tank, the tank heats the building
  - Wood-fired boilers cannot change output as quickly as liquid fueled boilers; when heating load is variable, the tank smoothes out the load and gives the boiler controls time to react
  - When loads are very low, the boiler may shut down (it will automatically re-start when needed); during these "OFF" periods, the tank provide a reserve of hot water
  - By monitoring tank temperature, the boiler can "anticipate" when load starts to increase or decrease, and thus provide more stable temperatures
- A vent or boiler stack
  - This vents the products of combustion and boiler emissions into the air through an elevated stack or vent pipe
  - May or may not include additional emissions control equipment

Examples of the Portage and Main boiler and are included in Appendix A

Boiler Maintenance

In general, when evaluating small biomass boilers that serve one or two buildings, we do not include additional costs for maintenance associated with that boiler. This is not to say that there is not more maintenance associated with a biomass boiler as compared to an oil-fired boiler. In terms of project finance and viability, the point is not whether there is more maintenance or not, it is whether the additional maintenance has any cost associated with it.

In general, the additional work associated with a wood-fired boiler consists primarily of removing ash from the boiler once a day, and ensuring the feed bins or hoppers are full. Some larger chip-fired boilers and almost all pellet boilers (including all the ones we propose) actually de-ash themselves, but all require someone to fill the feed system. For stick-fired boilers, feeding the boiler is entirely manual and must take place several times a day. For chips or pellets, one simply keeps a bin or hopper full, depending on

the bin size and the heating load, this may be required once or twice a week, and is generally down with a Bobcat, front loader, or some equivalent.

Once a week one would spend perhaps an hour cleaning the heat exchange surfaces, and once a quarter or half-year, one would take 2 – 4 hours to thoroughly clean the boiler tubes with a brush.

Of course, failures can occur, with the boiler or with the feed system. However, failures occur with oil boilers as well, and the system as designed would automatically revert to the oil boilers in the event of a biomass boiler failure. The maintenance personnel would then fix the biomass system when time permits, as they do currently with equipment failures.

The costs associated with "non-failure" maintenance have up to three components; the cost of labor, the cost of maintenance materials, and the costs of outside maintenance or operating contracts. Taking each in turn:

- Labor: This is the cost of people's time. For this component, it is assumed that each village (or in some cases, some individual buildings within the village) has someone on the payroll whose job is to take of the existing oil-fired boilers. This may or may not be the entire scope of their job. If one assumes that de-ashing and disposal takes 30 minutes a day, and loading the bin (chips and pellets) takes an hour twice a week, and includes one hour per week for HX cleaning, then the day-to-day maintenance of the biomass boilers takes an additional 6.5 hours per week. This figure does not subtract out any time that would have been spent with the oil-fired boilers (which is no longer required, because they are not running).

  If a regular work week for a full time employee (FTE) is 40 hours, this is 0.1625 of a week, or looked at another way, 16.25 percent of an FTE. The question is, "Will the village actually hire someone full or part time to perform those tasks, or we they simply add them to the scope of the work of the existing FTE?" If they do not hire someone new, then there is no additional cost, even though there is additional maintenance.

  In our experience, at this very preliminary stage of evaluation, the villages simply do not know how they would maintain one or more biomass boilers – they have no experience of them, and of the time required. It also depends on how the fuel is generated and distributed. If an entity in the village takes on the making and distributing of wood chips, for instance, then the time (and thus the cost) associated with filling the fuel bins would almost certainly fall on that entity, and be built into the $/ton cost of the chips. The same would apply for villages on the road system that purchase pellets. In such a case, the additional maintenance would be reduced to the de-ashing (assuming the boiler does not do it automatically) and periodic cleaning; we believe it highly unlikely that additional personnel would be hired for these tasks. Thus we generally assume the value of this cost component to be zero at this preliminary stage.

- Maintenance Materials: Biomass boilers require no maintenance materials that other types of machinery (including oil-fired boilers) do not also require. Rotating machinery must be lubricated, motors must be checked for balance or excessive heat, and so one. Once again, at Level 2 stage of study, we assume the cost of this maintenance component to be zero.

- Outside Maintenance or Operating contracts: It may the case in some villages that an entity or person creates a business to maintain and/or operate boilers within the village. In such a case, this business would almost certainly charge an additional amount for operating and maintaining the new biomass boilers. However, we not aware that such an entity exists in this case, and so once again, we have set the cost of this component of maintenance to zero.

This leaves the extreme case of manual loading of stick-wood into stick-fired boiler. On a very cold day, this could require several hours per day, spread over four six-hour periods (we generally size stick-fired plants such that even in the coldest weather, they require no more than 4 "charges" per day). However, even here, we cannot be sure there is added cost – a tribal office might, for instance, simply require everyone on the staff to take turns loading the boiler. Alternately, they might hire one or more FTEs to do this.

The number of variables is very large, and at the Level 2 stage, we find that villages simply have not given much if any thought as to these matters. The L2 study is a screening study, used to decide whether or not to proceed to an conceptual design study and a business plan with a fuller understanding of how all aspects of the operation will be conducted; Thus, if the results of the L2 study are favorable, then the actual maintenance costs (if any), as well as a number of other operating details, are thoroughly determined and documented.

2.3 Proposed Configuration

The proposed final configuration, which has been modeled for this study, can be summarized as:

- A new exterior-grade wood chip fired boiler
- A new chip bin and chip material handling system from bin to boiler
- A pole shed wood chip storage area near the boiler bin
- The thermal storage tank is installed in the existing mechanical room
- The heat from the wood fired boiler is piped into the existing Washeteria mechanical room using copper pipe
- The heat from the wood fired boiler is also piped to the Community Hall using the connector walkway.
- A new hot water air handling unit and ductwork will need to be installed in the Community Hall – this is included in the cost estimate

Figure 2.3 below shows a typical configuration for an oil-fired boiler or boiler plant. In this example, there are two boilers, but only runs at a time. This would be the "existing" case.

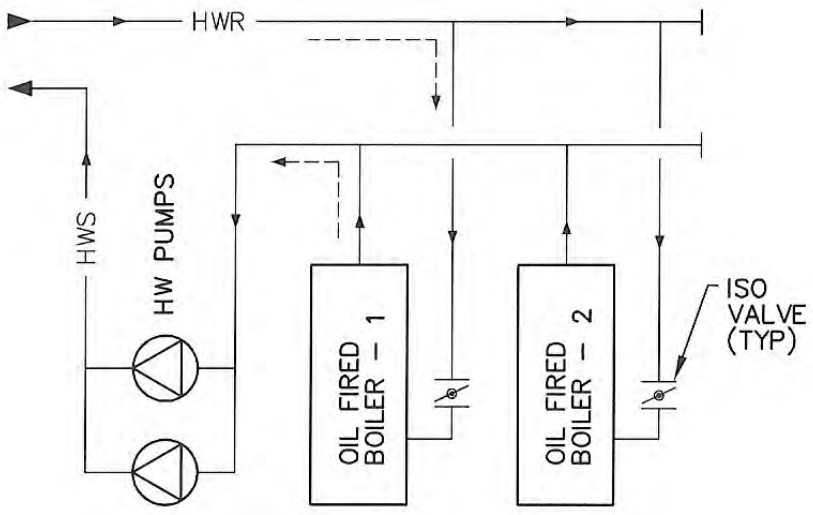

Figure 2.3

Figure 2.4 shows the proposed case (valves colored in solid are closed):

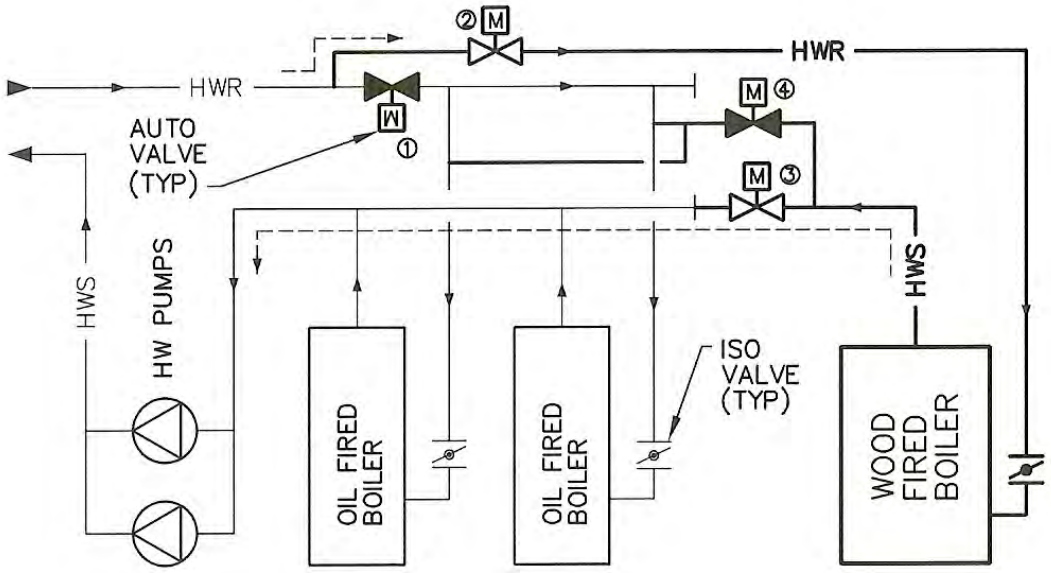

Figure 2.4

In this case, valve 1 is closed, which forces the hot water return water through the wood fired boiler instead of the oil-fired boiler. Likewise, valve 4 is closed, so the hot water from the wood-fired boiler bypasses the existing boilers and goes out to the building. If for any reason, the hot water supply temperature falls below setpoint by a set amount, the valves reverse position, and the existing boiler start.

In an even simpler version, there are no automatic valves – the cooler return water flow through the wood-fired boiler, and then the oil boiler. If for any reason the wood-fired system still does not meet supply water setpoint, the existing boiler fires.

The system works because each successive setpoint is set 5 or more degrees below the previous one. Say the two hot water supply set points were, in order, 185 deg F and 180 deg F. It was noted above that wood-fired boilers cannot modulate output as fast as a liquid-fired boiler. The setpoint spread prevents the existing oil-fired boilers from firing every time the wood fired boiler needs a bit of time to catch up (as does the thermal storage tank). At the same time, the system requires no operator intervention or automated controls. If the hot water temperature falls to 179 deg F, the oil-fired boiler does not know if the sun went down, or the wood pellets fouled the material handling system – it simply fires because the supply temperature has fallen below its setpoint.

Wood Chip Requirements, Storage and Handling

Wood chips most effectively used in this system are 1.5-2 inches and are made from any local wood seasoned at least one year to 30-35% moisture. The boiler will handle "green" chips at 45-50% moisture but efficiencies are significantly reduced. If a chip management plan is developed and wood id inventories for two years after harvest and before chipping it is expected that chips will have a moisture content around 20-25%, which will increase the number of available BTUs even more. Unless a drying system is installed chips will not dry effectively once in a pile. An open on one side pole shed with partial sides will be built close the boiler bin for several months of chip storage. A small commercial scale chipper will be utilized for chipping and a small skid steer front-end loader will be used for moving logs and feeding the boiler bin. The P&M Boiler has been demonstrated to work at -50F as an outside boiler, however, if chip freezing is determined to be a problem the bin could be placed in a heated mechanical room with the ability to fill the bin.

The P&M boiler comes standard with a chip bin that is approximately 156 cubic feet. At ~15 lb/cf, that is 2,340 lb of chips. At the maximum fuel consumption rate of 78 lb/hr, this is 30 hours of fuel. This bin will be located in the mechanical room, which will be kept above freezing, at a minimum. P&M also offers a larger bin; at 768 cubic feet, it would store just less than five times as much fuel. This larger bin uses a walking floor to keep the chips moving.

At the maximum output capacity of the boiler, the boiler would consume 78 lb/hr of chips. Thus the ~156 cubic foot bin would hold enough fuel to last 30 hours (assumes chips at a bulk density of 15 lb/cf). However, the calculations for Healy Lake indicate that the maximum burn rate for the P&M boiler in this application would be 38 lb/hr. Thus the 2,340 lb of fuel in the bin would last 61.6 hours, or if one assumes that only 90 percent of the bin volume is "useable", about 55 hours (2 and quarter days).

If the village elected to purchase the larger (30 cubic yard) bin, storage at full load (90 percent useable) would be increased to just over 11 days. To keep this bin under cover and above freezing would obviously increase the size of the mechanical room and thus the project cost. Typically, this option would be explored in an investment grade study (L3) that includes an engineered conceptual design study.

2.4 Energy Savings

Figure 2.5 below summarizes the energy consumption, existing and proposed, on a monthly basis:

Energy Summary (montly "heat out" and "cost" values are divided by 1,000 for formating reasons)

Washeteria		total	Jan	Feb	Mar	Apr	May	Jun	Jul	Aug	Sep	Oct	Nov	Dec
oil	gal	4,800	570	422	468	351	326	287	296	306	324	411	497	542
heat out	kBTU	520,992	61.8	45.8	50.8	38.1	35.4	31.1	32.1	33.2	35.2	44.6	53.9	58.8
cost	$	$28,800	$3.4	$2.5	$2.8	$2.1	$2.0	$1.7	$1.8	$1.8	$1.9	$2.5	$3.0	$3.3

*heat out = heat content of fuel * boiler eff (average efficiency is assumed at 0.810)*

Community Hall		total	Jan	Feb	Mar	Apr	May	Jun	Jul	Aug	Sep	Oct	Nov	Dec
oil	gal	1,785	348	202	225	94	53	16	16	28	62	156	271	314
heat out	kBTU	193,744	37.7	21.9	24.5	10.2	5.8	1.8	1.7	3.0	6.7	16.9	29.4	34.1
cost	$	$10,710	$2.1	$1.2	$1.4	$0.6	$0.3	$0.1	$0.1	$0.2	$0.4	$0.9	$1.6	$1.9

*heat out = heat content of fuel * boiler eff (average efficiency is assumed at 0.810)*

Biomass Boiler		total	Jan	Feb	Mar	Apr	May	Jun	Jul	Aug	Sep	Oct	Nov	Dec
heat out	kBTU	714,736	99.6	67.7	75.3	48.3	41.2	32.9	33.8	36.2	41.9	61.5	83.4	92.9
chips	tons	93.6	13.0	8.9	9.9	6.3	5.4	4.3	4.4	4.7	5.5	8.1	10.9	12.2
stick	cords	58.3	8.1	5.5	6.1	3.9	3.4	2.7	2.8	3.0	3.4	5.0	6.8	7.6
pellets	tons	48.5	6.7	4.6	5.1	3.3	2.8	2.2	2.3	2.5	2.8	4.2	5.7	6.3
chips	$	$11,694	$1.6	$1.1	$1.2	$0.8	$0.7	$0.5	$0.6	$0.6	$0.7	$1.0	$1.4	$1.5
stick	$	$14,565	$2.0	$1.4	$1.5	$1.0	$0.8	$0.7	$0.7	$0.7	$0.9	$1.3	$1.7	$1.9
pellets	$	$15,746	$2.2	$1.5	$1.7	$1.1	$0.9	$0.7	$0.7	$0.8	$0.9	$1.4	$1.8	$2.0

Energy Savings		total	Jan	Feb	Mar	Apr	May	Jun	Jul	Aug	Sep	Oct	Nov	Dec
chips	$	$27,816	$3.9	$2.6	$2.9	$1.9	$1.6	$1.3	$1.3	$1.4	$1.6	$2.4	$3.2	$3.6
stick	$	$24,945	$3.5	$2.4	$2.6	$1.7	$1.4	$1.1	$1.2	$1.3	$1.5	$2.1	$2.9	$3.2
pellets	$	$23,764	$3.3	$2.3	$2.5	$1.6	$1.4	$1.1	$1.1	$1.2	$1.4	$2.0	$2.8	$3.1

Figure 2.4

Additional Benefits for Community Sustainability

In discussions with Healy Lake community during the site visit the community continually stated that they would like to become as energy self sufficient as possible and get tribal members to move back to the community. They asked the question should we use wood chips or pellets. We discussed the goal and the pros and cons of pellets vs. chips. Pellets are available from North Pole and can be delivered over the ice road across the lake after full freeze up or via boat during the summer. However, pellets are just another form of imported energy even if it is less expensive than fuel oil. We discussed the fact that pellets are more convenient and less work (just like oil). However, if the community is truly striving for greater energy independence then the best way is with a chip boiler utilizing local wood. By doing this the tribe can pay itself and community members to harvest wood, make chips, and feed the boilers.

Import displacement is always the best path for a community to take towards greater sustainability. However, the community has to decide that it is willing to take on this work or the project will not work and the better path would be a pellet boiler and purchasing pellets.

2.5 Cost Estimate

The construction cost estimate is provided below. These are what are commonly referred to as the "hard costs". The remaining soft costs, fees, permits, etc, are detailed in Section 1.

Construction Cost Estimate

Tag	description	quantity	units	lump sum/ material	labor	chip-fired total	stick-fired total	pellet-fired total
1	chip fired boiler	1.00	ea	29,000		$29,000		
2	install	1.00	ls		2,470	$2,470		
3	freight	1.00	ea	2,400		$2,400		
4	accessories	1.00	ls	900		$900		
5	material handling	1.00	ea					
6								
7	stick fired boiler (3)	1.00	ea	14,640			$14,640	
8	install	1.00	ls		4,150		$4,150	
9	freight	1.00	ea	4,010			$4,010	
10								
11	pellet fired boiler	1.00	ea	15,498				$15,498
12	install	1.00	ls		1,920			$1,920
13	freight	1.00	ea	1,500				$1,500
14	accessories	1.00	ls	1,338				$1,338
15	material handling	1.00	ea	3,200				$3,200
16								
17	boiler stack	20.00	ft	50			$1,000	$1,000
18	building addition		sf	75				
19	mechanical room piping	1.00	ls	7,500		$7,500	$7,500	$7,500
20	connection to ex system	1.00	ls	4,660		$4,660	$4,660	$4,660
21	primary pump	1.00	ea	1,025	150	$1,175	$1,175	$1,175
22	heat exchanger	1.00	ea	1,110	225	$1,335	$1,335	$1,335
23	400 gal storage tank	1.00	ea	3,569		$3,569	$3,569	$3,569
24	added work in Comm	1.00	ls	17,758		$17,758	$17,758	$17,758
25	pex piping	60.00	ft	21.25		$1,275	$1,275	$1,275
26	insul boards		boards	8.50	10.38			
27								
28	electrical in mech room	1.00	ls	1,500		$1,500	$1,500	$1,500
29								
30	controls point cost	8.00	pts	1,000		$8,000	$8,000	$8,000
31	controls panel	1.00	ea	3,500		$3,500	$3,500	$3,500
32	controls labor	25.00	hr		75	$1,875	$1,875	$1,875
33					mechanical subtotal	$72,043	$61,073	$61,729
34					general conditions 0.030	$2,161	$1,832	$1,852
35					rentals, small tools 0.020	$1,441	$1,221	$1,235
36					margin 0.100	$7,204	$6,107	$6,173
37					mechanical total	$82,849	$70,233	$70,988
38								
39					electrical subtotal	$1,500	$1,500	$1,500
40					general conditions 0.250	$375	$375	$375
41					rentals, small tools 0.050	$75	$75	$75
42					margin 0.250	$375	$375	$375
43					electrical total	$2,325	$2,325	$2,325
44								
45					controls subtotal	$13,375	$13,375	$13,375
46					general conditions 0.025	$334	$334	$334
47					rentals, small tools 0.015	$201	$201	$201
48					margin 0.100	$1,338	$1,338	$1,338
49					controls total	$15,248	$15,248	$15,248
50								
51						chip-fired	stick-fired	pellet-fired
52					total construction	$100,421	$87,806	$88,561

Appendix 1.0 Site Photos

Figure 1. Heally Lake Washateria showing 4000 gallon fuel tank

Figure 2. Washateria front view

Figure 3. Front view of community hall

Figure 4. Unheated walkway connector between community hall and washateria

Figure 5. Rear view of Washateria

Figure 6. Washateria boiler room

Figure 7. Hot water fed hat air unit installed by community post Washateria construction

Appendix 2.0 P&M Boiler Brochure

EFFICIENT & ECONOMICAL! REDUCE WOOD WAS

SUPPORT LOCAL ECONOMY - NOT FOREIGN IMPORTS

Heat exchanger with reverse return 2" diameter fire tubes.

Illustrates rounded burn chamber, fire in the burn pot and the water tubes of the heat exchanger.

Fire head is surrounded by molded, refractory cement.

We can burn a variety of wood chips including some overage, knots and smaller branch pieces, which eliminates the need for screening to get totally perfect chip sizes as required by some designs. The ideal chip is 1.5 to 2 inches, chip fed through a 3" auger with 3/8" flighting. This unique heavy duty drive enables us to feed chips, sawdust and even dry pine shavings in such a way that burn back will not happen.

1. The highly efficient outdoor hydronic heater has the ultimate in heat exchanger design (Reverse return 2" diameter fire tubes).
2. Water tubes above the fire to extract maximum heat before flue gases travel under a water baffle. The water baffle at the back of the firepot traps additional heat and fly ash. Flue gases then travel through the twenty fire tubes.
3. Round burn chamber and jacket. Round firepot is completely surrounded by water jacket.
   - Round provides the best circulation of water and has the least welds.
   - Round firepot eliminates side wall warping
   - Round has less expansion/contraction therefore less weld stress
   - Round is self circulating. Therefore no cold or hot spots
   - Round gives the fire better flame contact with the metal.
   - Round has no corners for ash to sit in
   - Round is the strongest design for outdoor water furnaces.
   - Round is stronger to last longer, just as the steam engines were round for a reason.
4. Welds are double (boiler style) for total penetration.
5. Combustion blower introduces air through specially designed slots in the feed head. Forced air feed at the firepot and in the exhaust ensure a clean complete burn of the bio-mass fuel.
6. Stoker has controllable "Fire Keep Mode".
7. Johnson A419 Aquastat controls water temp to within 1°. Also has a high limit safety aquatstat.
8. VFD speed controlled feed rate. Auger feeds chips into the burn head.
9. High quality fan comes with overload protected, ball-bearing motor, motor capacitor started for long life.
10. Fire head is surrounded by molded refractory cement.
11. VFD converted, allows normal 110 power to run a 3 phase 220 industrial motor.
12. Non pressurized boiler has low water cut off – no fuel cut off and low temperature cut off. The non pressurized system is safe to operate and no special operator license is required to operate. Standard rated pre-insulated pipe can be used to deliver the heat into the building.
13. Uses off-the-shelf parts that are readily available.
14. Warnock Hersey – UL approved.

VISIT US AT
www.portageandmainboilers.com
FOR TESTIMONIALS!

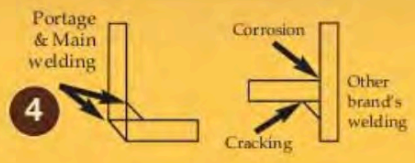

Johnson A419 Aquastat

STE & YOUR HEATING COSTS AT THE SAME TIME!

S • REDUCE YOUR DEPENDENCE ON FOSSIL FUELS!

Enviro Chip Burner 850 Bin offers:

- Large 30 yard feed bin (6ft high, 8ft wide and 16ft long) has hydraulic controlled opening lid to keep out the rain and snow.
- The bin cover is hydraulically actuated, making refilling the supply bin as simple as pushing a button. Viewing ports on the ends of the storage bin facilitate checking chip levels from the ground.
- The complete chip feed system is operated with one electrically driven hydraulic pump which enables the use of PLC controlled hydraulic motors. This lends itself to automatic modulating feed rates and results in a smooth operating feed into the boiler.
- Hydraulic rams for trouble free chip feed into the feed screw auger which feeds directly into the boiler. Two hydraulic pistons take turns supplying the fuel auger driven by a hydraulic motor the feed auger is regulated by the control panel.
- An electric eye monitors the feed rate.
- Easily adjustable hydraulic feed makes it easy to control the fuel feed and ash removal rate. Auto ash removal by an auger into an external ash bin.
- Coupled with the feed auger and controlled by the same panel is the automatic dual forced air draft system.
- Simple controls that can call your phone if anything is going wrong. The entire furnace and fuel system is controlled through one panel which includes an alarm system designed for immediate notification of emergency situations using any regular phone line.
- System can be either controlled by maintaining the furnace water temperature; or by sensors controlling the furnace water temperature according to variations in the outdoor temperatures. Control panel is conveniently located right over the feed auger.

Enviro-Chip Burner Facts:

- One ton (2,000 lbs) cord wood can yield 4.2 million BTUs
- **One ton (2,000 lbs) wood chips can yield 6 million BTUs**

Chip heating with our automated system means less manual labour:

Portage & Main Enviro-Chip Furnaces are automated systems that are less labor intensive and very efficient. Important benefits for using biomass chips, in place of fossil fuels like oil and gas to provide heat for large residential heat requirements/small business or larger requirements such as schools, municipal buildings, apartments or other institutional buildings include:

Sustainably produced bio-mass is a local renewable energy source. Biomass has historically remained at a stable price. It is not affected by global economics.

Enviro-Chips systems burn cleanly. Portage & Main Water Furnaces are known for their efficiency. Customers, who have had other models, previous, to owning a P&M, report a P&M furnace burns 1/3 to 1/2 less wood and provides more usable BTU's of heat.

- The mess associated with cordwood storage and use inside a building, along with the ash removal from an inside stove, is absent. Bio-mass chips are confined to a storage bin with no dirt or dust entering the rest of the building.
- Unlike indoor wood stoves, there are virtually no visible emissions and odors.
- Portage & Main Chip burning Hydronic heaters give long burn times between fills, use less wood than conventional wood boilers as the wood burning rate is controlled by metering in the amount of bio-mass chips.

Burning wood for energy has a neutral effect on the environment. When wood is burnt, it recycles the carbon that has already been in the atmosphere.

Wood chipped for fuel is the productive use of a low-grade waste product. Wood fuel chips come primarily from either sawmill or timber harvesting residues. When wood chips are from sawmills, they are usually a waste that must be disposed of or sold. When the wood chips come from harvesting operations in the woods, the lower grade trees are being removed in a sustainable means, thus, it will improve the overall health of the forest. There are vast amounts of surplus wood residue from communities, sawmills, and logging operations that could be used for biomass energy without any direct impact on forests.

The cost of biomass fuel is generally less than half the cost of fuel oil on a btu basis. While environmental and societal benefits are important, often the most undeniable reason for deciding on biomass chip heating are the economical benefits. **The money spent on biomass keeps energy dollars circulating in your local economy and supports jobs in your local forest products industry.**

- Because biomass fuel is locally produced, harvested, and processed, its use creates and sustains jobs in the region's economy.
- Biomass energy keeps dollars spent on fuel in the local economy – compared with fossil fuel systems, which generally export fuel dollars.
- By making use of bio-mass chips for fuel, biomass energy strengthens the whole regional forest-products industry, giving it new local markets and improving the forest resource, along with creating jobs.
- All the jobs and economic activity created by biomass projects also generate important local, state, and federal tax revenues.

Benefits of owning a Portage & Main Outdoor Enviro-Chip Burner

Gives you peace of mind, safety and convenience...

- No fire hazard inside your home.
- No messy fuel, ashes or smoke in your home.
- No increase in fire insurance premiums unlike indoor stoves.
- No risk of carbon monoxide poisoning.
- The water temperature is electronically controlled with an aquastat, that has water temperature display features.
- Surfaces are insulated or water cooled for safe operation.
- Automatic feeding from the chip supply bin.

Efficient and dependable...

- Portage & Main Outdoor Water Furnaces have proven to be very efficient and reliable, built with time tested and proven design features.
- It uses 1/3 to 1/2 less fuel than most conventional boilers.
- The built-in multi-pass tube heat exchanger maximizes heat extraction from the flue gases.

Provides societal and environmental benefits...

- It minimizes the use of expensive fossil fuels such as natural gas, oil or electricity.

PORTAGE & MAIN OUTDOOR WATER FURNACE:

	Enviro-Chip Burner 500	Enviro-Chip Burner 850
Furnace Output	Up to 278,884 BTUs/hr	800,000 BTUs/hr
Shipping Weight (lbs)	2,600	4,500
Water Capacity (US gallons)	120	200
Chimney Size	6"	8"
Fire Tube Heat Exchanger	20 tubes - 2" diameter	24 tubes - 2" diameter
Furnace Height	72"	98"
Furnace Width	48"	59"
Furnace Length	57"	57"
Ash Removal	Ashpan	4.5' Ash Auger

Heat load should be calculated. Many factors influence the heating area - such as the insulation value of the structure, and the climate in which the furnaces operate. It is always best to calculate the number of BTUs required per hour for your heating needs.

Manufacturers reserve the right to make changes or modifications to products. Brochures are updated regularly, however for the most current information please see the website: **www.portageandmainboilers.com**

CALL DEALER FOR DETAILS: MAX. OUTPUT BTU'S LISTING BASED ON EPA REQUIRED TESTING

Portage & Main Outdoor Water Furnaces have a long history of great performance thus earning them the name of

The Original Efficient Green One Since 1973

Round firepot/water jackets and 1/4" cold rolled steels means less risk of warping related problems. W44 cold rolled steel has the same corrosion properties as boiler plate. It is known for being a very "uniform" steel, ideally suited to forming without fatiguing. It is easy to shear, break and is "welder friendly." All parts are laser cut for precision fitting which also allows for the bevel to be accurately filled when welding. The weld strength is increased by boiler/pipeline style double welds which take more time but is well worth it as it results in total penetration which helps prevent weld corrosion, cracking and pin holes leaks.

Chip heating system is built in North American for the tough North American conditions.

North American Portage & Main Outdoor Water Furnace Distributor

PORTAGE AND MAIN FURNACES.COM

HEAT SMART PLUS
R.R. #5, Site #16, Comp #114
PRINCE ALBERT, SK S6V 5R3
1-800-561-0700
www.portageandmainboilers.com

Authorized Portage & Main Outdoor Water Furnace Dealer

Revised June 2012