October 13, 2008

GOLDEN VALLEY ELECTRIC ASSOCIATION

Eva Creek Wind Farm-Limited Study
Doubly Fed Asynchronous Generators

Power Flow, Reactive Compensation,
Transient Stability
Revision 0

PROJECT NUMBER:
115215

PROJECT CONTACT:
MIKE WALBERT, P.E.
EMAIL:
MWALBERT@POWERENG.COM
PHONE:
208-788-0357

PROJECT CONTACT:
KEITH STUMP, MSEE
EMAIL:
KSTUMP@POWERENG.COM
PHONE:
678-966-4435

PROJECT CONTACT:
ALICE MULLINS, P.E.
EMAIL:
ALICE.MULLINS@POWERENG.COM
PHONE:
208-685 6364

Eva Creek Wind Farm-Limited Study

Prepared by POWER Engineers, Inc. for

Golden Valley Electric Association

POWER Engineers, Inc. Project No. 115215

For additional information contact:

Keith Stump (678) 966-4435 kstump@powereng.com
Alice Mullins (208) 685-6364 alice.mullins@powereng.com
Mike Walbert (208) 788-0357 mwalbert@powereng.com

Rev.	Issue Date	Issued For	Prep By	Chkd By	Appvl By	Notes
A	10/08/08	Appvl	KBS	AMM		Issued for approval
0	10/13/08	Impl	KBS	AMM	SP	POWER approved sent to GVEA

"Issued For" Definitions:

- "Prelim" means this document is issued for preliminary review, not for implementation
- "Appvl" means this document is issued for review and approval, not for implementation
- "Impl" means this document is issued for implementation
- "Record" means this document is issued after project completion for project files

Use Alpha (A, B, . .) Rev. identifiers for "Prelim" or "Appvl" issues. Otherwise use numeric (0, 1, . . .)

TABLE OF CONTENTS

1.0 Introduction.....1
2.0 Power Flow Cases.....2
3.0 Dynamic Simulation Results.....3
4.0 Conclusion 9

TABLES
Table 1- Winter Peak- C System Load Power Flow Summary.....2
Table 2- Dynamic Case Summary.....7
Table 3- LVRT II Set Points 9

FIGURE
Figure 1- LF Case 4b- Douglas 6

APPENDIX 11

Golden Valley Electric Association
Eva Creek Wind Farm – Limited Study
Doubly Fed Asynchronous Generators (DFAG)
(POWER Engineers, Inc. Project No. 115215)

1.0 Introduction

The object of this analysis is to determine the effect of installing a 24 MW wind farm consisting of sixteen GE 1.5 MW doubly-fed asynchronous generators. Steady state power flow and dynamic analysis of the GVEA system is performed using the Siemens PSS/E system analysis package. The PSS/E software package contains user written models for the wind turbine generators (WTG) that are used in this analysis.

The effect of the Eva Creek wind farm is evaluated for transmission system responses to faults near the Wilson substation that are cleared from the system in five (5) cycles. The present system (without the Eva Creek wind farm) response is evaluated by opening the Healy to Wilson 138 kV line. When the wind farm is added, the fault is cleared from the system by opening the Eva Creek to Wilson section of the line. A 138 kV switching station will be required at the Eva Creek point of common coupling (PCC) when the wind farm is installed.

Prior to dynamic system simulations, steady state conditions are required from which the dynamic simulations begin. These steady state conditions are developed from projected system load conditions using the load flow calculation feature of PSS/E. Base case power flow conditions for this work are based on a projected winter peak system loading condition. For these base cases, power from the south toward the GVEA system is kept constant with 70 MW flowing north from the Douglas substation. Table 1 summarizes the power flow conditions. LFcases 1 through 5 embedded in the appendix file LFresults.zip show the power flow results on a single line diagram of the GVEA system.

2.0 Power Flow Cases

Table 1
Winter Peak –C System Load Power Flow Summary
70 MW flowing north from the Douglas Substation

LFcase	Eva Crk.	Healy		North Pole				Zehnder	Wilson		
	Wind Farm	HLP S1	HCCP S2	NPP #1	NPP #2	NPCC GTG	NPCC STG	GT1	Shunt Cap Bank	Battery Energy Storage System	
	MW	MW	MW	MW	MW	MW	MW	MW	MVAR	MW	[1]MVAR
1	0	28	0	0	52.1	50	12	0	0	0	8.1
2	23.95	28	0	0	29.4	50	12	0	0	0	12.9
3	0	28	58.5	0	0	50	12	4.1	0	0	23.3
4	0	28	58.5	0	0	50	12	4.1	15	0	8.1
5	23.95	28	58.5	0	0	37	7.3	0	15	0	16.1

1 Positive means that BESS is supplying capacitive MVARs

Case 1 is representative of the way that the present transmission system would be operated with the winter peak loading. Stability runs from this initial condition are used to evaluate present system stability without the Healy Clean Coal Plant (HCCP) and the Eva Creek wind farm.

Case 2 is similar to Case 1 except that the Eva Creek wind farm is added and the output power of the North Pole Plant (NPP) generator #2 is reduced to compensate for the addition of the wind farm. The power flowing north from the Douglas substation is kept at 70 MW. Stability runs from this condition are compared to dynamic cases based on Case 1 to evaluate the effect of the wind farm without the HCCP.

Case 3 is a no Eva Creek wind farm case similar to Case 1 except that HCCP is activated and operated at 58.5 MW, North Pole Plant #2 (NPP #2) is off line and Zehnder #1 is operated at 4.1 MW to keep the power flow from Douglas at 70 MW. This condition is not acceptable because the Wilson Battery Energy Storage System (BESS) is operating very close to its limit and would not be available for dynamic VAR support during a system transient. This case is not used as a base for dynamic simulations.

Case 4 is similar to Case 3 except that a 15 MVAR capacitor bank is added to the 138 kV Wilson substation bus. This brings the BESS away from its limit to an output of 8.1 MVAR. In this case, the BESS has some dynamic range available to help the system dynamic response. Load flow results from Case 4 are shown on Figure 1. This is the base case for no wind farm operation with the HCCP in service. It means that GVEA must install the Wilson 15 MVAR capacitor bank before the HCCP is used for this heavy load condition. The capacitor bank could probably be switched in 5 MVAR steps (or smaller) and controlled manually or with the BESS

control. Independent voltage control is not appropriate for a capacitor bank at the Wilson substation.

Case 5 is similar to Case 4 with the addition of the 15 MVAR Wilson substation capacitor bank and the Eva Creek wind farm in service. Zehnder generator #1 is not operated in this case and the output of the North Pole Combined Cycle (NPCC) power plant is reduced to 44.3 MW to keep the power flow from the Douglas substation north at 70 MW for this condition. This case is the initial condition for the preliminary transient analysis to determine the effect of the addition of the wind farm with the HCCP in service.

Dynamic runs based upon the Case 1, 2, 4 and 5 power flow results provide a good first look at the effect of the proposed Eva Creek DFAG wind farm and its control.

3.0 Dynamic Simulation Results

Table 2 summarizes the dynamic cases simulated for this analysis. The first group of cases (Cases 1 through 11) is run without the Eva Creek wind farm. These cases provide an indication of the present transmission system dynamics and a basis for judging the effects of an Eva Creek wind farm. Cases Dyn1w through Dyn11w are comparable cases with the Eva Creek wind farm on the system correspondingly numbered to the present system cases without the wind farm. The "w" after the first number in the case name indicates that the Eva Creek wind farm is active. The LF number at the end of the case name indicates the power flow case upon which the dynamic case is based. Not every dynamic case without the wind farm has a comparable wind farm case. Consequently, there is not a wind farm case number corresponding to every non-wind farm case. PSS/E output plots for the dynamic cases listed in Table 2 are included in the embedded *.zip files in the Appendix.

One consideration for the Eva Creek wind farm addition (and present operation) is the capability of the Battery Energy Storage System (BESS) at the Wilson substation to supply real power. The amount of real power it can supply is a function of the charge and condition of the batteries. Hence, some variations in the BESS output capability are simulated for both cases with and without the Eva Creek wind farm. The effect of BESS real power is simulated by initializing its real power limit then increasing its real power set point to the limit value four (4) cycles after the fault is initiated. The dynamic BESS model simulates the internal BESS control and its actual real and reactive power output.

3.1 Dynamic cases without the Eva Creek wind farm

Cases Dyn1LF1, Dyn4LF1 and Dyn5LF1 are fault-clear responses for faults near the Wilson substation on the Healy 138 kV line without the Eva Creek wind farm or the Healy Clean Coal Plant (HCCP). The three cases have the BESS real power varied from 0 to 20 MW to 40 MW after the fault is initiated. These cases are all stable and result in lightly damped 0.6 Hz north-south power oscillation through Healy with an increase from base case power flowing north from Healy toward Gold Hill.

The other non wind farm cases all have the HCCP in service with an output of 58.5 MW. Operation of the HCCP puts the system closer to its stability limit and requires real power from the BESS to keep the system stable and synchronized.

Case Dyn6LF4 simulates a solid 3-phase fault near the Wilson substation and no real power available from the BESS. Loss of the Healy-Wilson 138 kV line is so unstable that the simulation gets numerical errors and can not run to the end of the programmed 15 second simulation. Cases Dyn2LF4 and Dyn3LF4 are similar to the solid 3-phase fault case except fault impedance is added to reduce the severity of the disturbance. Case Dyn2LF4 has a 200 ohm fault resistance and is still unstable, but the simulation continues to the end of the programmed 15 second run. Case Dyn3LF4 is similar except it has a 400 ohm fault resistance. It is stable and results in 145 MW flowing north from Healy toward Gold Hill. These three cases have no real power available from the BESS to provide the power to the Fairbanks area lost from the Healy-Wilson 138 kV line outage.

Cases Dyn7LF4 through Dyn11LF4 with the HCCP in service all simulate solid faults near the Wilson substation with various BESS real power limits. Case Dyn7LF11 simulates a BESS real power limit of 10 MW. The case pulls out of synchronism and is unstable, but the simulation continues to the end of the 15 second programmed run. When the BESS real capability is increased to 12 MW (Case Dyn8LF4) the system is stable and the real power flowing north from Healy toward Gold Hill increases to 134 MW. Further increases in BESS real power capability also result in stable fault-clear transients with reduced power in the line from Healy to Gold Hill. These cases indicate that a minimum of 12 MW is required from the BESS to maintain system stability when the Healy-Wilson 138 kV line is lost due to a fault on the line near the Wilson substation.

3.2 Dynamic cases with the Eva Creek wind farm

The Eva Creek wind farm model was added to the system at Eva Creek using a 16 WTG equivalent with 1.5 MW GE DFAGs aggregated on a 34.5 kV collector bus; 24 MW total. The PCC for the Eva Creek wind farm is between the Healy and Wilson substations approximately 17.4 miles (138 kV line distance) north of the Healy substation.

The wind model used for Eva Creek included GE's optional LVRT II low voltage ride through (LVRT) package. The LVRT II under/over voltage set points used in the study are taken from GE publication ARE_E210 Rev. 2, and are listed in Table 3.

Cases Dyn1wLF2, Dyn4wLF2 and Dyn5wLF2 are comparable to the corresponding non wind farm cases Dyn1LF2, Dyn4LF2 and Dyn5LF2. These cases are all stable and have BESS real power availabilities of 0 MW, 20 MW and 40 MW. For the wind farm cases, only the line between Eva Creek and Wilson is opened to clear the fault. Increasing BESS real power results in less post fault power required to flow north from Healy toward Gold Hill. These three wind farm cases have lower amplitude transients than the comparable non wind farm cases and slightly better damping for the 0.6 Hz north-south swing frequency.

Cases Dyn9wLF5, Dyn10wLF5 and Dyn11wLF5 have the HCCP in service generating 58.5 MW along with the 24 MW Eva Creek wind farm. Operation with the HCCP is more onerous for the transmission system than when the GVEA generation is farther north (North Pole generating station). Without the HCCP, no real power is required from the BESS to maintain system stability for the Wilson fault (Case Dyn1wLF2). With the HCCP, 24 MW of BESS power is required to maintain stability. This is illustrated by cases Dyn9wLF5 where the system is unstable with the BESS set point raised to 20 MW and Case Dyn10wLF5 where the system is stable when the BESS set point is raised to 24 MW. Case Dyn11wLF5 has the BESS set point raised to 40 MW to get system operation farther away from the stability limit. This lowers the power flowing north from Healy toward Wilson and increases the system damping of the 0.6 Hz north-south oscillatory transient initiated by the fault-clear transient.

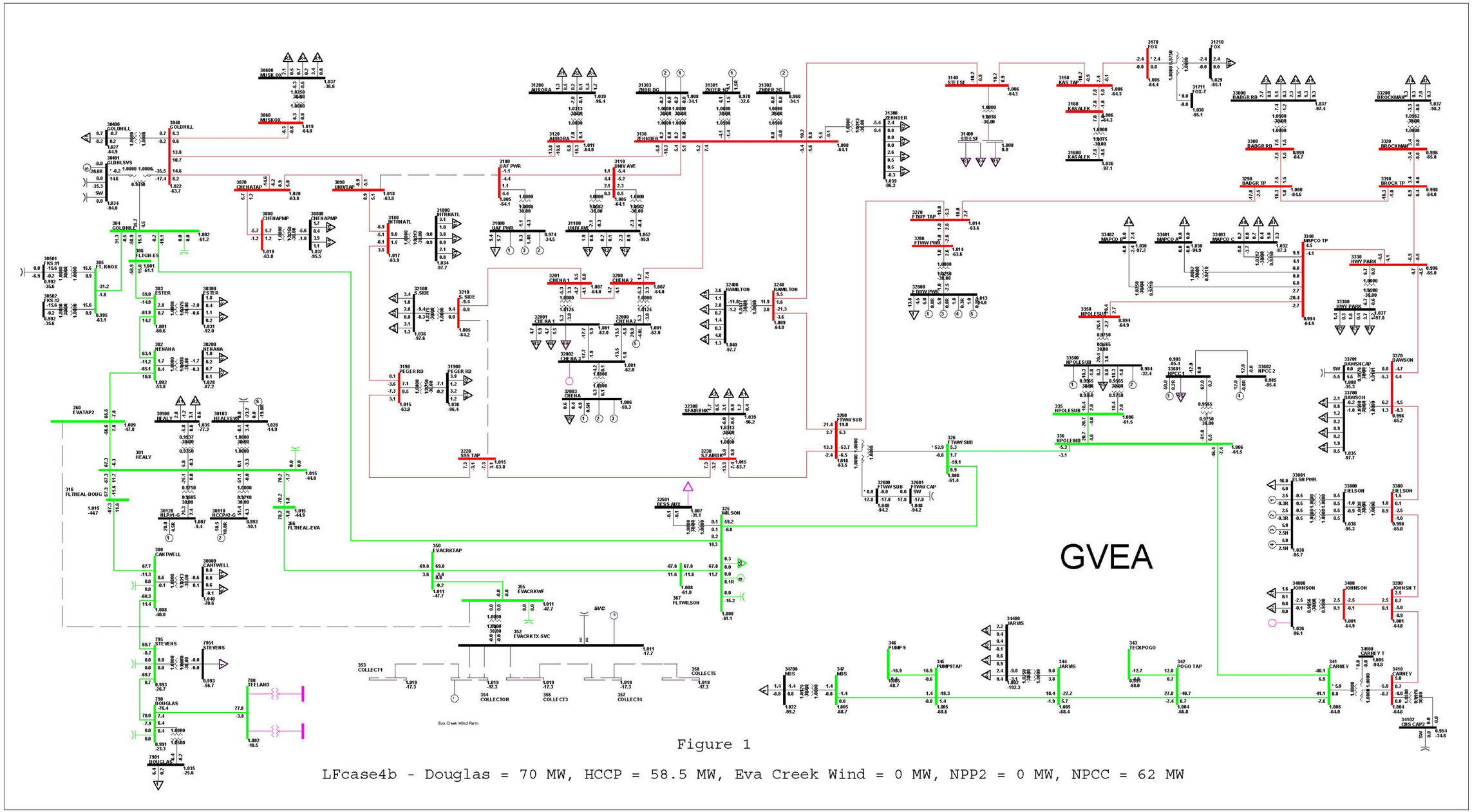

Figure 1

LFcase4b - Douglas = 70 MW, HCCP = 58.5 MW, Eva Creek Wind = 0 MW, NPP2 = 0 MW, NPCC = 62 MW

Table 2
Dynamic Case Summary
(70 MW flowing north from Douglas in the base load flow cases.
Clear fault by opening faulted line in 5 cycles.)

Dynamic Case	LF Base Case	Case Description	Simulation Results
Dyn1LF1	1b	No Eva Creek wind farm, No HCCP, NPP #1=0 MW, NPP #2=52.1 MW, NPCC=62 MW, **Solid** fault near Wilson, Healy-Wilson line opens.	BESS Pset=0 MW @ 4 cycles. System stable. Power north from Healy goes to 85MW. Compare to Case Dyn1wLF2.
Dyn2LF4	4b	No Eva Creek wind farm, HCCP=58.5 MW, NPP #1=0 MW, NPP #2=0 MW, NPCC=62 MW, Zehnder #1=4.1MW. **200 Ω** fault near Wilson, Healy-Wilson line opens.	BESS Pset=0 MW @ 4 cycles. System unstable. Simulation shows pullout at approximately 2.8 seconds. Solution continues to 15 seconds.
Dyn3LF4	4b	No Eva Creek wind farm, HCCP=58.5 MW, NPP #1=0 MW, NPP #2=0 MW, NPCC=62 MW, Zehnder #1=4.1MW. **400 Ω** fault near Wilson, Healy-Wilson line opens.	BESS Pset=0 MW @ 4 cycles. System stable. Power north from Healy goes to 145MW
Dyn4LF1	1b	Same as Case Dyn1LF1	BESS Pset=20 MW @ 4 cycles. System stable. Power north from Healy goes to 72 MW. Compare to Case Dyn4wLF2.
Dyn5LF1	1b	Same as Case Dyn1LF1	BESS Pset=40 MW @ 4 cycles. System stable. Power north from Healy goes to 55MW. Compare to Case Dyn5wLF2.
Dyn6LF4	4b	No Eva Creek wind farm, HCCP=58.5 MW, NPP #1=0 MW, NPP #2=0 MW, NPCC=62 MW, Zehnder #1=4.1MW. **Solid** fault near Wilson, Healy-Wilson line opens.	BESS Pset=0 MW @ 4 cycles. System unstable. Simulation fails with message ”PSS/E – NT has just detected a floating point arithmetic error …”.
Dyn7LF4	4b	Same as Case Dyn6LF4	BESS Pset=10 MW @ 4 cycles. System unstable. Simulation runs to 15 seconds. Compare to Case Dyn9wLF2.

Table 2
Dynamic Case Summary (continued)

Dyn8LF4	4b	Same as Case Dyn6LF4	BESS Pset=12 MW @ 4 cycles. System stable. Power north from Healy goes to 134 MW. Compare to Case Dyn10wLF2.
Dyn9LF4	4b	Same as Case Dyn6LF4	BESS Pset=20 MW @ 4 cycles. System stable. Power north from Healy goes to 127 MW. Compare to Case Dyn9wLF2.
Dyn10LF4	4b	Same as Case Dyn6LF4	BESS Pset=24 MW @ 4 cycles. System stable. Power north from Healy goes to 123 MW. Compare to Case Dyn10wLF2.
Dyn11LF4	4b	Same as Case Dyn6LF4	BESS Pset=40 MW @ 4 cycles. System stable. Power north from Healy goes to 108 MW. Compare to Case Dyn11wLF2.
Dyn1wLF2	2b	Eva Creek wind farm=24 MW, No HCCP, NPP #1=0 MW, NPP #2=29.4 MW, NPCC=62 MW, **Solid** fault near Wilson, Healy-Wilson line opens.	BESS Pset=0 MW @ 4 cycles. System stable. Power north from Healy goes to 115 MW. Compare to Case Dyn1LF1.
Dyn4wLF2	2b	Same as Case Dyn1wLF2	BESS Pset=20 MW @ 4 cycles. System stable. Power north from Healy goes to 98 MW. Compare to Case Dyn4LF1.
Dyn5wLF2	2b	Same as Case Dyn1wLF2	BESS Pset=40 MW @ 4 cycles. System stable. Power north from Healy goes to 80 MW. Compare to Case Dyn5LF1.
Dyn9wLF5	5b	Eva Creek wind farm=24 MW, HCCP=58.5 MW, NPP #1=0 MW, NPP #2=0 MW, NPCC=44.3 MW. **Solid** fault near Wilson, Healy-Wilson line opens.	BESS Pset=20 MW @ 4 cycles. System is unstable. Simulation shows pullout at approximately 2.2 seconds. Solutions continue to 15 seconds. Pullout will also occur for all BESS powers below 20 MW. Compare to Cases Dyn7LF4 and Dyn9LF4
Dyn10wLF5	5b	Same as Case Dyn9wLF5	BESS Pset=24 MW @ 4 cycles. System stable. Power north from Healy goes to 150 MW. Compare to Cases Dyn8LF4 and Dyn10LF4.
Dyn11wLF5	5b	Same as Case Dyn9wLF5	BESS Pset=40 MW @ 4 cycles. System stable. Power north from Healy goes to 132 MW. Compare to Case Dyn11LF4.

Table 3
LVRT II Set Points

Voltage Range pu	Trip Time sec.
0.0 – 0.15	0.02
0.15 – 0.7	0.625
0.7 – 0.75	1.0
0.75 – 0.85	10.0
0.85 – 0.9	600.0
1.10 – 1.15	1.0
1.15 – 1.3	0.1

4.0 Conclusion

1. System operation with the HCCP in service is more onerous than with generation closer to Fairbanks (North Pole Power Plant).

2. When the HCCP is operated at high power output for heavy winter load conditions, 15 MVAR of additional capacitance is needed at the Wilson substation to keep the BESS away from its VAR limit with or without a wind farm at Eva Creek.

3. For the peak winter system loading considered, power flowing north from Douglas is limited to 70 MW and without the HCCP in service, the 24 MW DFAG wind farm can be added to the GVEA system without requiring significant real power from the BESS. The DFAG Eva Creek wind farm has some system performance benefits for this operating condition. The system exhibits lower amplitude transients than the comparable non wind farm cases and slightly better damping for the 0.6 Hz north-south swing frequency.

4. For the peak winter system loading considered, power flowing north from Douglas is limited to 70 MW, with the HCCP in service and the 24 MW DFAG wind farm added, 24 MW of real power is required from the BESS to maintain system stability for the Wilson fault considered. The comparable case, without the Eva Creek wind farm, required only 12 MW from the BESS to maintain system stability for the same fault condition.

5 Previous studies found the following system improvements necessary for operation of HCCP:
   - 5 cycle relay protection of the Healy to Wilson 138 kV lines.

- 5 cycle protection will likely also be needed for the Healy to Gold Hill 138 kV line.
- 15 MVAR of additional capacitance at the Wilson substation.
- A minimum of 12 MW of real power capability from the Wilson BESS.

6. The following additional system improvements are required for the Eva Creek wind farm addition with HCCP also in operation:
   - A minimum of 24 MW of real power capability from the Wilson BESS.
   - A 138 kV switching station at the Eva Creek wind farm PCC.
   - Low or zero voltage ride through capability of the WTGs. Further study can identify minimum level of LVRT capability.

Appendix

Steady State Power Flow Results

LFresults.zip

LFresults.zip

Dynamic PSS/E output plots for non-wind farm cases
Dyn1LF1 through Dyn11LF4

DynNoWind.zip

DynNoWind.zip

Dynamic PSS/E output plots for wind farm cases
Dyn1wLF2 through Dyn11wLF5

DynYesWind.zip

DynYesWind.zip